FabiaTech Corporation

IPC Solution

Website: http://www.fabiatech.com

Email: support@fabiatech.com

Panel PC

FP8080 Series

User's Manual

JULY 2010
Version: 1.3
Part Number: FP8080

Copyright

Disclaimer

FabiaTech makes no representation of warranties with respect to the contents of this publication. In an effort to continuously improve the product and add features, FabiaTech reserves the right to revise the publication or change specifications contained in it from time to time without prior notice of any kind from time to time.

FabiaTech shall not be reliable for technical or editorial errors or omissions, which may occur in this document. FabiaTech shall not be reliable for any indirect, special, incidental or consequential damages resulting from the furnishing, performance, or use of this document.

Trademarks

Trademarks, brand names and products names mentioned in this publication are used for identification purpose only and are the properties of their respective owners.

Technical Support

If you have problems or difficulties in using the system or setting up the relevant devices, and software that are not explained in this manual, please contact our service engineer for service, or send email to support@fabiatech.com.

Returning Your Board For Service & Technical Support

If your board requires servicing, contact the dealer from whom you purchased the product for service information. You can help assure efficient servicing of your product by following these guidelines:

- A list of your name, address, telephone, facsimile number, or email address where you may be reached during the day
- Description of you peripheral attachments
- Description of your software (operating system, version, application software, etc.) and BIOS configuration
- Description of the symptoms (Extract wording any message)

For updated BIOS, drivers, manuals, or product information, please visit us at www.fabiatech.com

Table of Contents

Chapter 1 Introducing the FP8080 Panel PC

Overview

The FP8080 is 8.4-inch TFT Panel PC, this panel PC with low-power CPU module inside and touch screen device. This user's manual provides information on the physical features, installation, and BIOS setup of the FP8080.

Built to unleash the total potential of the Intel Celeron-M Processor, Able to support CPU C-M 600MHz or 1GHz/512k FSB400 CPU, this system supports one 10/100/1000M Base –TX LAN ports, 1GB DDR2-RAM, mini PCI socket for wireless LAN, four USB2.0 ports, and a dual display VGA controller.

Each FP8080 has one port for I/O communications. One RS232/RS422/RS485 port is available.

The FP8080 is perfect for ATM machines, KIOSK, point-of-sales/point-of- information, gaming and infotainment, measurement technology, lotteries, banking and Thin Client and small Embedded Control. The unit is only 55mm (D) X250mm (W) X180mm (H).

Series Comparison Table

Model	FP8080T	FP8080BT
System Processor	Intel C-M1G/512K FSB400/FCBGA479	Intel C-M 600MHz/512K FSB400/FCBGA479
N+S-Chipset	*QG82910GMLE+NH82801FBM*	
*Memory 1*200 Pin-DIMM (Max.)*	*DDR2 400/533/667 1GB/2GB*	
Storage HDD	*One CF and SATA*	
Watchdog Timer	*Yes*	
Multi I/O	*One RS232/RS422/RS485*	
USB 2.0	*Four USB ports*	
Audio	*Ear-Phone And MIC-In*	
RJ45 LAN port	*One PCIE Intel 82573L 10/100/1000Mbps*	
Mini-PCI Socket	*One*	
Panel Display Type	8'4 TFT LCD	
Max. Resolution	*800X600*	
Max. Colors	*16.2M*	
Luminance(cd/㎡)	*220 cd/㎡*	
Dot Size(mm)	*0.213*0.213*	
Viewing Angle	*75°(H)/75°(V)*	
Lamp Life	*20,000Hrs*	
Touch Screen (w/T)	4 Wire, Analog Resistive	
Resolution	*800X600*	
Light Transmission	*80%±%5*	
Life Time	*10 Million Activations*	
Operating Temperature	0~+50℃(32~122℉)	
Storage Temperature	-20~+60℃(4~140℉)	
Dimensions (Unit: mm)	55(D) x 250(W) X 180(H)	

Layout

FP8080

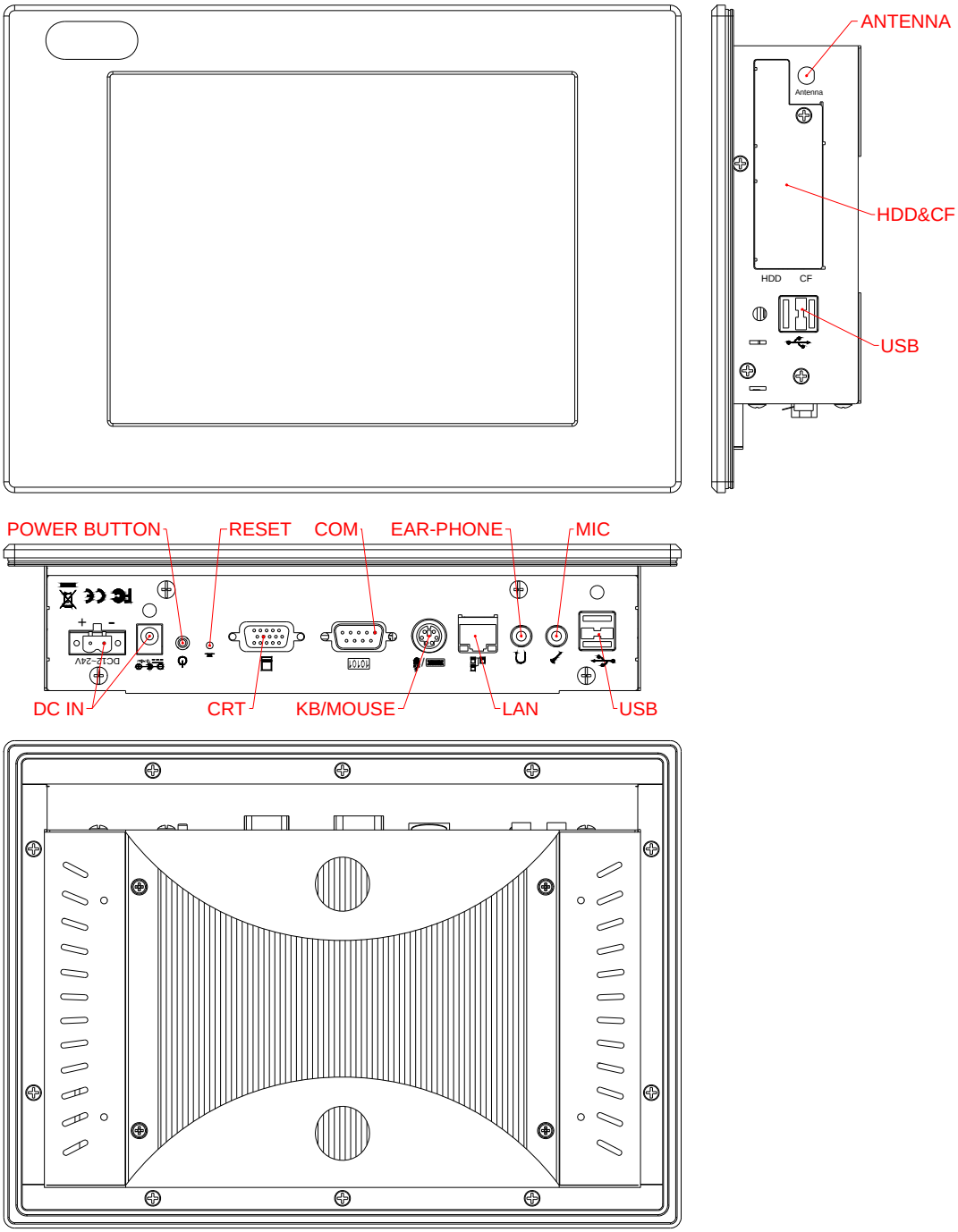

Specifications

- ***Processor Board –***

  Intel® Celeron®M processor 600MHz or 1GHz FSB400 BGA479 CPU with 1GB DDR2-RAM.

- ***I/O Outlets –***

  One PCIE 10/100/1000 base-TX Ethernet LAN ports.

  Four USB ports (2.0) and one RS-232 serial port.

  One VGA (CRT) and one PS/2 compatible keyboard/mouse interfaces.

  Two audio connectors for Earphone, and Microphone-in.

  One Mini PCI Socket for Wireless module.

  One DC-In plug connector and one terminal block for DC power input.

  One power switches push button and one reset button.

- ***Storage Bay-***

  Compact Flash socket for Compact Flash modules or MicroDrives.

  One 2.5" SATA hard disk space.

- ***LCD Display-***

  Front panel with 8.4-inch color LVDS TFT LCD panel.

  Supports up to SVGA 800X600 16.2M colors.

- ***Resistive Touch screen –(Only For FP8080T)***

  4-wire analog resistive touch screen device with USB interface.

  The USB interface Software support Windows 2000/XP.

- ***Temperature***

  Operating temperature 0~50℃(32~122℉)

  Storage temperature -20~60℃(-4~140℉)

- ***Power requirement –***

  +12V ~ +24V DC, 1.98A maximum (1.28A typical) with DC19V Input (Base on 1GHz CPU).

- ***Dimensions –***

  55.0mm (D) x 250.0mm (W) x 180.0mm (H)

- ***Certifications-***

  EMC: CE/FCC

- ***Others-***

  Front panel protection: IP65 Compliant

Packing List

Upon receiving the package, verify the following things. Should any of the mentioned happens, contact us for immediate service.

- Unpack and inspect the FP8080 package for possible damage that may occur during the delivery process.
- Verify the accessories in the package according to the packing list and see if there is anything missing or incorrect package is included.
- If the cable(s) you use to install the FP8080 is not supplied from us, please make sure the specification of the cable(s) is compatible with the FP8080 system.

Note: After you install the FP8080, it is recommended that you keep the diskette or CD that contains drivers and document files, and keep the document copies, or unused cables in the carton for future use.

The following lists the accessories that may be included in your FP8080 package. Some accessories are optional items that are only shipped upon order.

- One FP8080x industrial Panel PC.
- One AC to DC19V power adapter and one AC power code cable.
- One pack of 2.5' SATA HDD installing with 4 screws
- One pack of panel PC wall mounts with 4 screws.
- FP8080K1 VESA Mounting Kit with 5 fixed screws.(Option)
- FP8080K2 DIN Rail Mounting Kit with 11 fixed screws. (Option)
- One compact disc includes touch screen driver software.

Chapter 2 Hardware Installation

This chapter introduces the system connectors and guides you to apply them for field application.

Before Installation

Before you install the system, make sure you follow the following descriptions.

1. Before removing the cover, shut down the operation System and disconnect power switch to off and unplug AC cable.

2. Install or unplug any connector, PCI card (Mini-PCI), Compact Flash, and hard disk be sure that the power is disconnected or power switch to off from the system. If not, this may damage the system.

3. The ESD (Electricity Static Discharge) may be created from human body that touches the board. It may do damage to the board circuit.

□ Removing Covers –Installing Hardware

If you are installing hardware option, you can remove the right side or back side cover. The following figure will guide you how to install 2.5" SATA HDD inside, Compact Flash modules, mini PCI module and DDR2-RAM module the FP8080 and how to install the FP8080 fixers. (Please see the spots circled.)

➢ a. Installing Hard disk and Compact Flash to FP8080

The following figure will guide you install fix hard disk and compact flash to the FP8080.

✧ *a1. Fasten Screws the SATA HDD into the HDD Metal Frame*

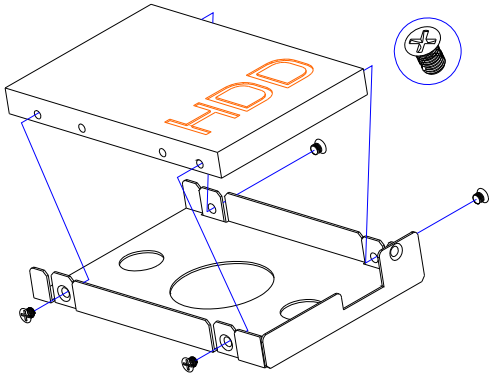

✧ *a2. Unscrew Right Side Cover: Installing Hard disk and Compact Flash*

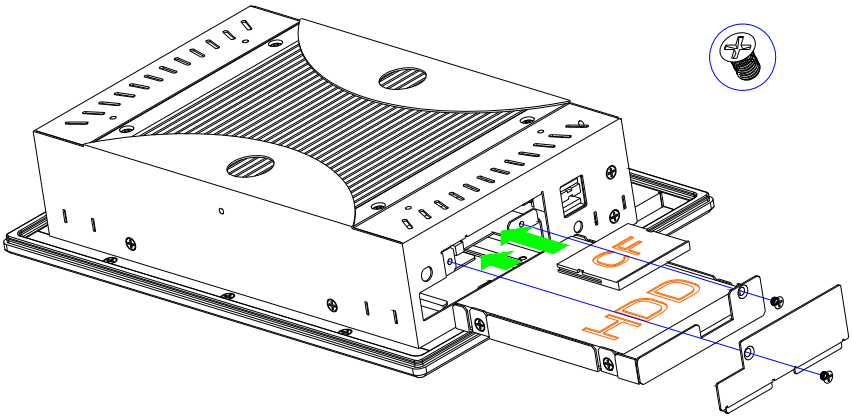

Note: 1. Use caution when handling the hard disk to prevent damage to SATA connector as you inserts hard disk. Gently slide the hard disk into the SATA connector and stop when you feel resistance.

2. The Compact Flash socket supports 3.3V Compact Flash and Micro Drives.

- **b. Unscrew the Screw and Removing back cover**

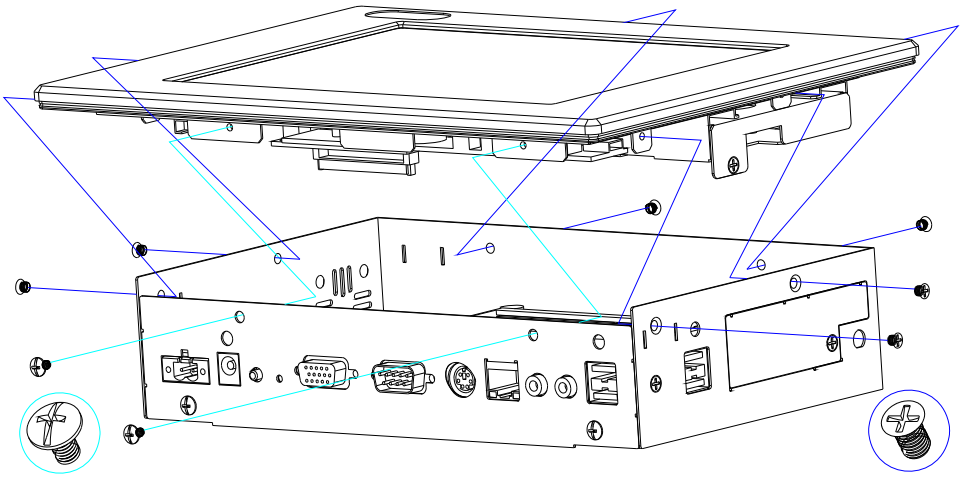

- **c. Installing Mini PCI Card**

You may extend additional mini PCI WLAN module to FP8080 by removing the back cover. Connect the antenna cable from right side antenna hole to Mini PCI WLAN (the auxiliary board). Release the screws on the back of the unit. (Please see the spots circled.)

- ***c1. Add on Mini-PCI module and Connect Antenna Cable***

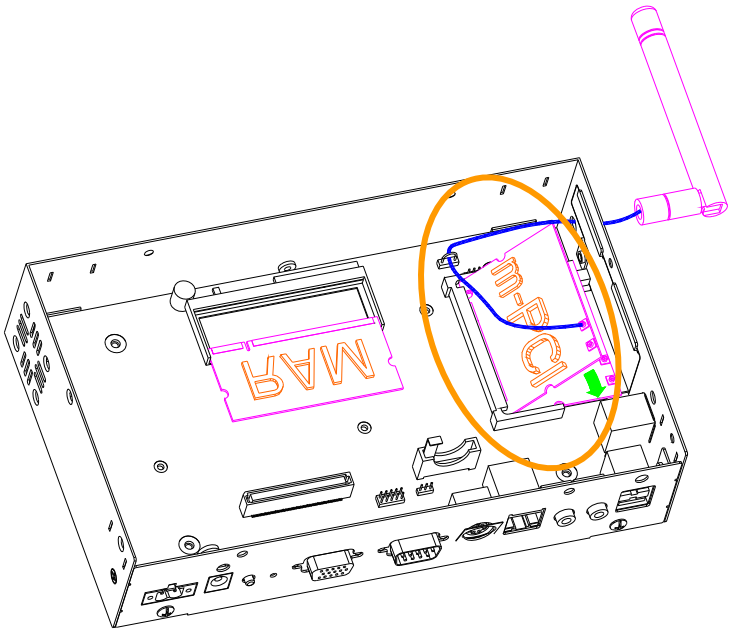

➢ **d. Installing Memory:**

You may extend additional memory to FP8080, See as following figure and rear pictures. The So-DIMM socket supports 512MB to 2GB of DDR2 RAM modules.

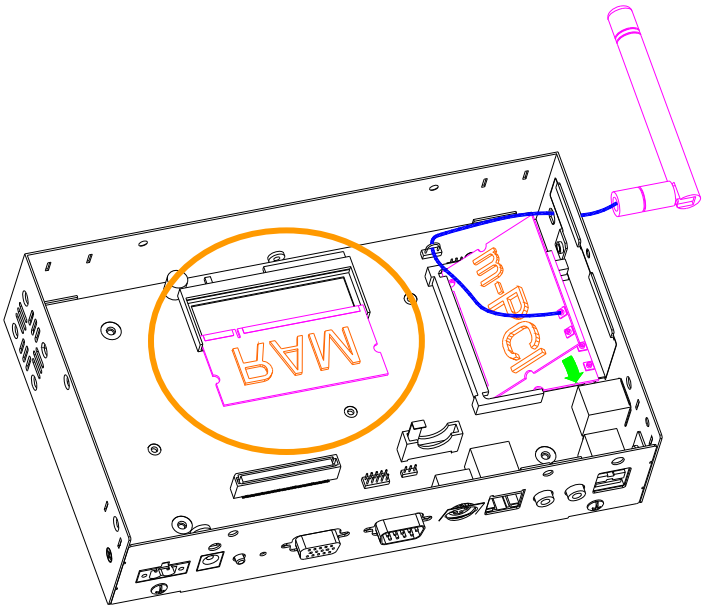

➢ **e. Installing the universal fixers on FP8080**

Please refer to the back side figure for installing the FP8080 with universal fixers.

e1. FP8080K1 -Wall Mounting Kit with VESA 75/100 mm Standards

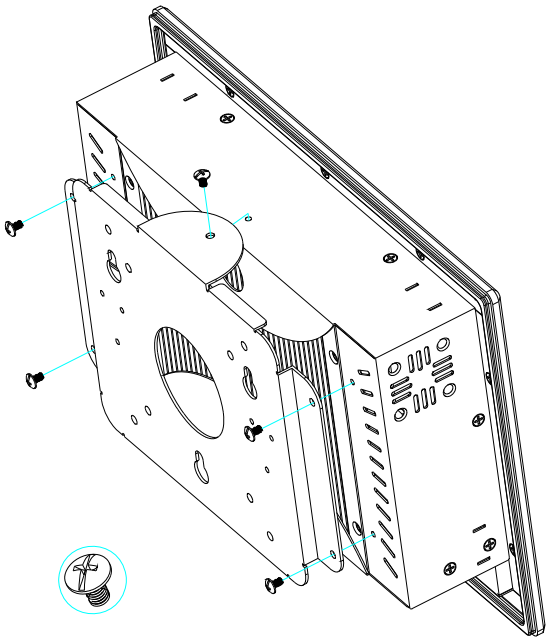

e2. FP8080K2 - DIN RAIL mounting kit

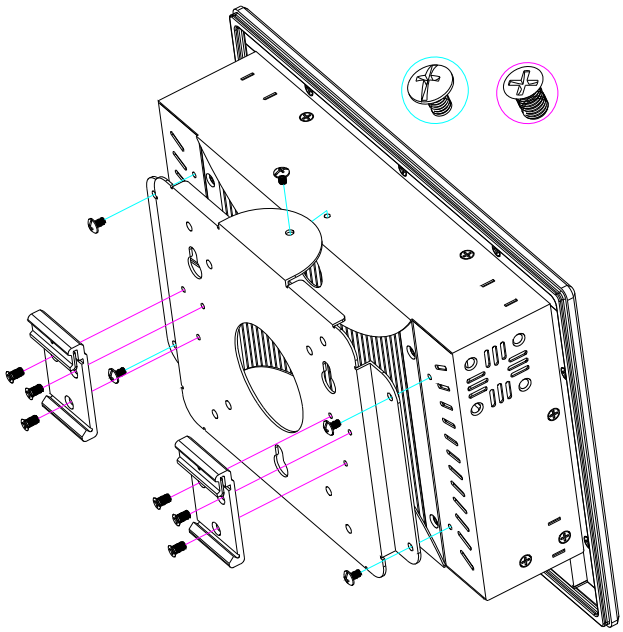

e3. Embedded Wall mounting

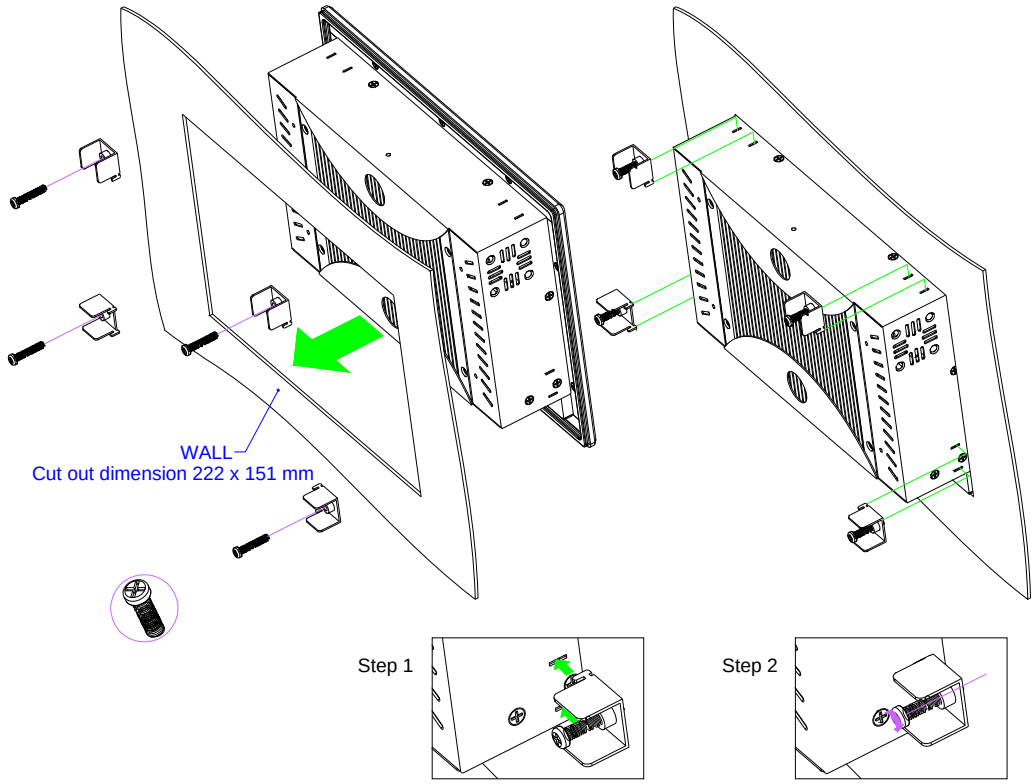

□ I/O Peripheral Connectors Panel

View from the bottom and right side, If you are connecting the monitor, keyboard, mouse, LAN, audio, COM and USB to the FP8080. See following figure and a side pictures.

a. Bottom Side of FP8080 Panel PC

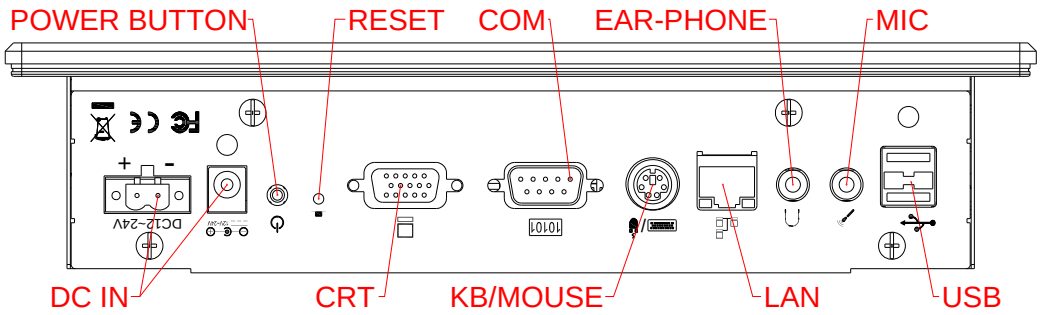

b. Right Side of FP8080 Panel PC

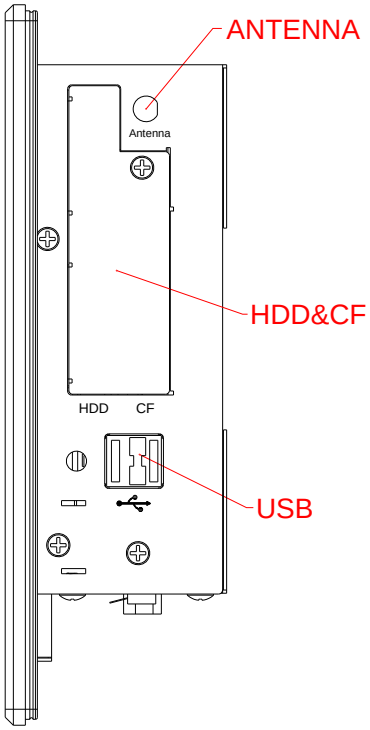

1. A CRT connector is provided for CRT signals

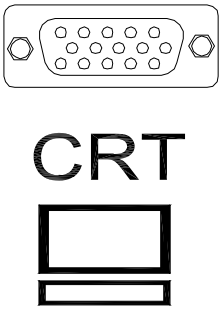

DB15	Signal
1	Red
2	Green
3	Blue
13	Hsync
14	Vsync
12	DDC Data
15	DDC Clock
5 & 10	Digital Ground
6,7,8	Analog Ground
Others	Not Used

2. The connectors use the included adapter cable you can attach standard PS/2 type keyboard and mouse. Standard PS/2 keyboard can be plugged into this connector without any adapter cable. If PS/2 keyboard and mouse will be used simultaneously, a Y-type (3-terminal) adapter cable is needed.

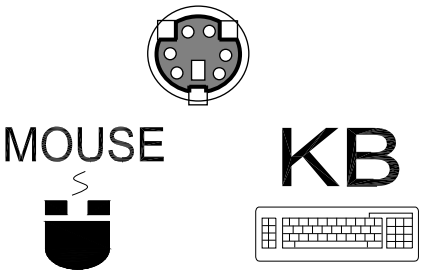

KB /Mouse	Description
1	Keyboard Data
2	Mouse Data
3	Ground
4	VCC
5	Keyboard Clock
6	Mouse Clock

3. The DB9 (COM1) is standard serials port connector. The following tables show the signal connections of these connectors.

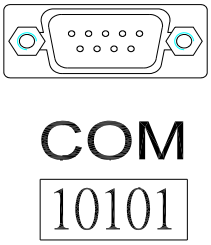

DB-9	RS-232	RS-422	RS-485
1	-DCD		
6	-DSR		
2	RXD	RX-	485-
7	-RTS	TX-	
3	-TXD	RX+	485+
8	-CTS	TX+	
4	-DTR		
9	-RI		
5	Ground		
Metal	Case Ground		

4. LAN port

The RJ45 connector with 2 LED's for LAN. The right side LED (orange) indicates data is being accessed and the right side LED (green) indicates on-line status. (On indicates on-line and off indicates off-line)

RJ45 connector

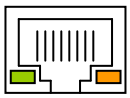

1 8

(Front View)

The following lists the pin assignment of RJ45.

RJ45	LAN1/2	RJ45	LAN1/2
1	TPTX+	5	TPTX1-
2	TPTX -	6	TPRX -
3	TPRX+	7	TPRX1+
4	TPTX1+	8	TPRX1-

5. USB ports

The FP8080 supports a four port USB connector. Any USB device can be attached to USB ports with plug-and-play supported. The right side ports is USB # 1/2 and the bottom side ports is USB # 3/4.

4 1

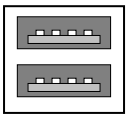

(Front View)

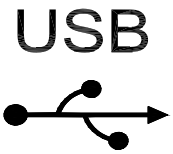

USB#1~4	Signal
Pin 1	USBV
Pin 2	USBD-
Pin 3	USBD+
Pin 4	USBG

6. Connecting the Audio Microphone-In/EAR-phone

EAR-Phone

Mic-In

□ Connecting the DC Power and Power Button

Power is supplied through an external AC/DC power adapter or power DC In. Check the technical specification section for information about AC/DC power input voltage. See following figure and a side pictures.

- DC-Power Jack: Use External AC/DC power adapter plug into DC-jack (2) and use the cable mount to fix hole (1), then pull at cable(3).

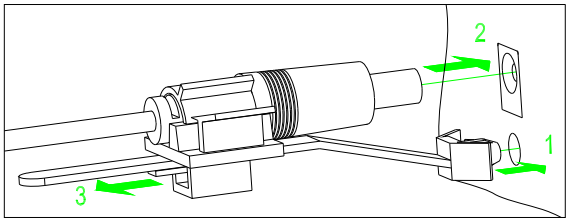

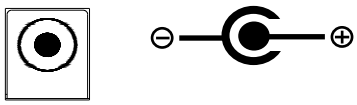

DC +12V~+24V
FP8080T: 47W Minimum

- DC Power Connector: Use external 2-pin apart able terminal block.

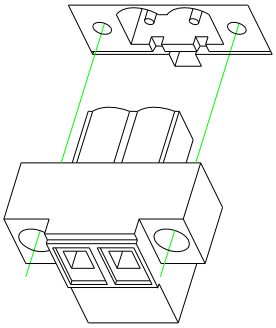

DC12~24V

− +

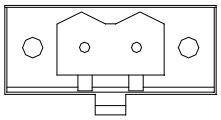

Terminal Block

- Power Button & Reset Push Button: Pushing the Power button once will switch the FP8080 on and off, depending on system BIOS (Integrated Peripherals > Super IO Device>PowerOn After PWR-Fail or Power Manager >Soft-Off By PWR-BTTN). And Reset push button is switcher for system reset; Push and release the button will cause hard ware reset of FP8080 and restart system booting.

Power button: On/Off

RESET

Reset Push Button: Restart

Chapter 3 BIOS Setup

This chapter describes the BIOS setup.

Overview

BIOS are a program located on a Flash memory chip on a circuit board. It is used to initialize and set up the I/O peripherals and interface cards of the system, which includes time, date, hard disk drive, the ISA bus and connected devices such as the video display, diskette drive, and the keyboard. This program will not be lost when you turn off the system.

The BIOS provides a menu-driven interface to the console subsystem. The console subsystem contains special software, called firmware that interacts directly with the hardware components and facilitates interaction between the system hardware and the operating system.

The BIOS default values ensure that the system will function at its normal capability. In the worst situation the user may have corrupted the original settings set by the manufacturer.

All the changes you make will be saved in the system RAM and will not be lost after power-off.

When you start the system, the BIOS will perform a self-diagnostics test called Power On Self Test (POST) for all the attached devices, accessories, and the system. Press the [Del] key to enter the BIOS Setup program, and then the main menu will show on the screen.

Note: Change the parameters when you fully understand their functions and subsequence.

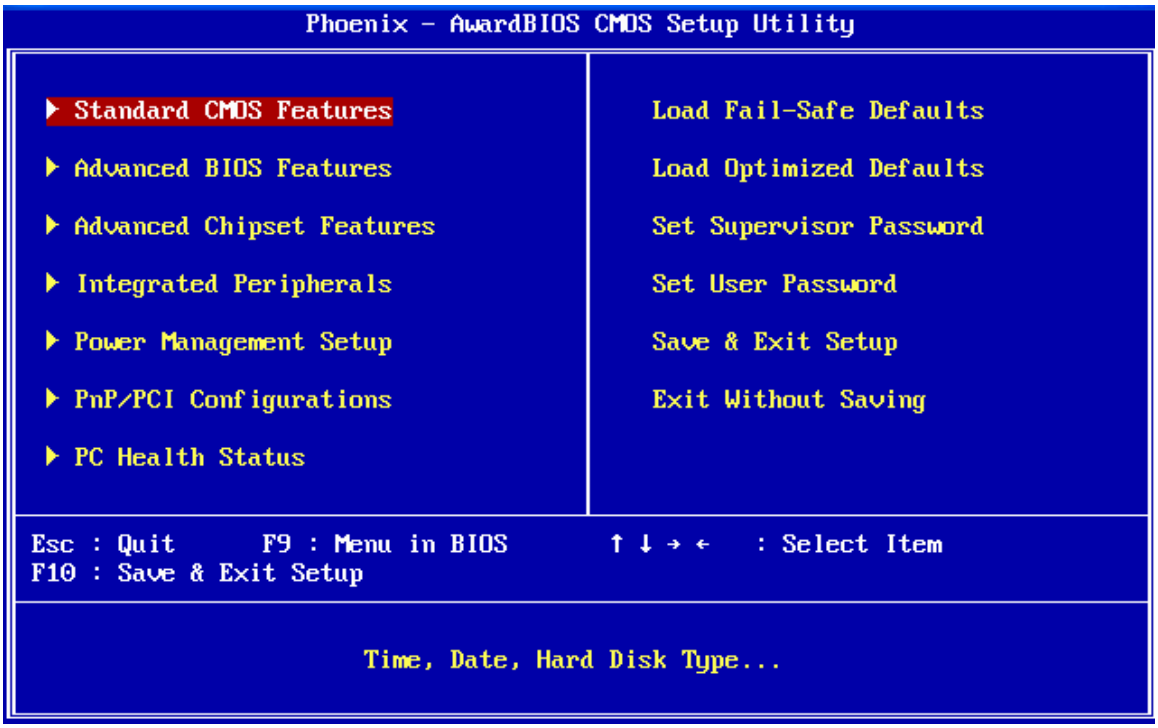

◻ BIOS Functions

On the menu, you can perform the following functions

1. Standard CMOS Features
2. Advanced BIOS Features
3. Advanced Chipset Features
4. Integrated Peripherals
5. Power Management Setup
6. PNP/PCI Configuration
7. PC Health States
8. Load Fail-Safe Default: to configure the system in fail-safe mode with predefined values.
9. Load Optimized Default: to auto configure the system according to optimal setting with pre-defined values. This is also the factory default setting of the system when you receive the board.
10. Set Supervisor Password
11. Set User Password
12. Save Settings and Exit: perform this function when you change the setting and exit the BIOS Setup program.
13. Exit without saving: perform this function when you want to exit the program and do not save the change.

◻ Keyboard Convention

On the BIOS, the following keys can be used to operate and manage the menu:

Item	Function
ESC	To exit the current menu or message
Page Up/Page Down	To select a parameter
F1	To display the help menu if you do not know the purpose or function of the item you are going to configure
F6	Fail-Safe Default
F7	Optimized Default
F10	Save and exit
UP/Down Arrow Keys	To go upward or downward to the desired item

STANDARD CMOS SETUP

This section describes basic system hardware configuration, system clock setup and error handling. If the CPU board is already installed in a working system, you will not need to select this option anymore.

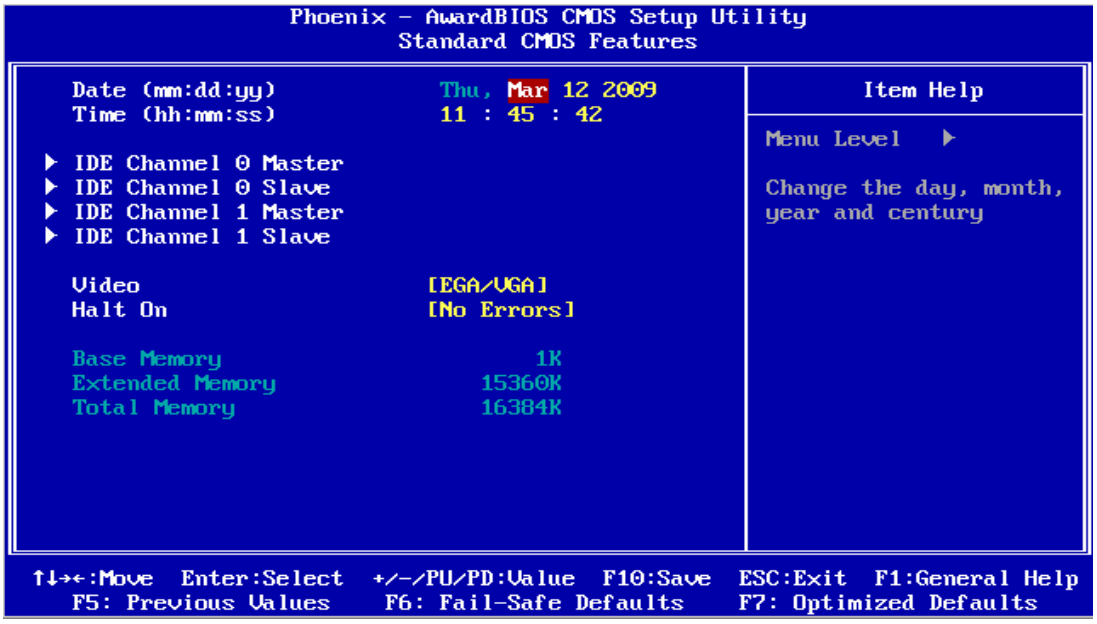

- **Date & Time Setup**

Highlight the <Date> field and then press the [Page Up] / [Page Down] or [+]/ [-] keys to set the current date. Follow the month, day and year format.

Highlight the <Time> field and then press the [Page Up] / [Page Down] or [+]/ [-] keys to set the current date. Follow the hour, minute and second format.

The user can bypass the date and time prompts by creating an AUTOEXEC.BAT file. For information on how to create this file, please refer to the MS-DOS manual.

- **Hard Disk Setup**

The BIOS supports various types for user settings, The BIOS supports <Pri Master>, <Pri Slave>, so the user can install up to two hard disks. For the master and slave jumpers, please refer to the hard disk's installation descriptions and the hard disk jumper settings.

You can select <AUTO> under the <TYPE> and <MODE> fields. This will enable auto detection of your IDE drives during boot up. This will allow you to change your hard drives (with the power off) and then power on without having to reconfigure your hard drive type. If you use older hard disk drives, which do not support this feature, then you must configure the hard disk drive in the standard method as described above by the <USER> option.

- **Video**

This option selects the type of adapter used for the primary system monitor that must match your video display card and monitor. Although secondary monitors are supported, you do not have to select the type in Setup.

You have two ways to boot up the system:

When VGA set as primary and monochrome set as secondary, the selection of the video type is "EGA/VGA Mode".

When monochrome set as primary and VGA set as secondary, the selection of the video type is "Monochrome Mode".

- **Error Halt**

This option determines whether the computer will stop if an error is detected during power up.

No errors	The system boot will not be stopped for any error that may be detected.
All errors	Whenever the BIOS detect a non-fatal error the system will be stopped and you will be prompted.
All, But Keyboard	The system boot will not stop for a keyboard error; it will stop for all other errors.
All, But Diskette	The system boot will not stop for a disk error; it will stop for all other errors.
All, But Disk/Key	The system boot will not stop for a keyboard or disk error; it will stop for all other errors.

- **Memory**

This option is display-only which is determined by POST (Power On Self Test) of the BIOS.

- **Base Memory**

The POST of the BIOS will determine the amount of base (or conventional) memory installed in the system. The value of the base memory is typically 512K for systems with 512K memories installed on the motherboard, or 640K for systems with 640K or more memory installed on the motherboard.

- **Extended Memory**

The BIOS determines how much extended memory is present during the POST. This is the amount of memory located above 1MB in the CPU's memory address map.

- **Total Memory**

System total memory is the sum of basic memory, extended memory, and other memory.

BIOS Features Setup

This section describes the configuration entries that allow you to improve your system performance, or let you set up some system features according to your preference. Some entries here are required by the CPU board's design to remain in their default settings.

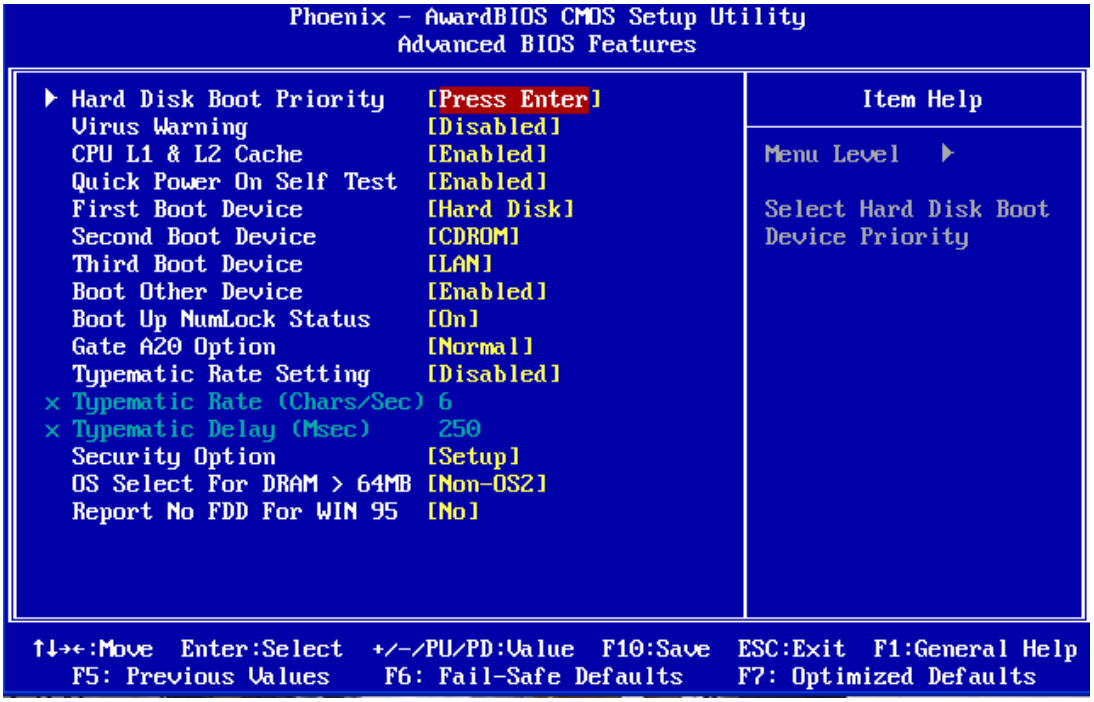

➢ **Hard Disk Boot Priority**

This field specifies which HDD device the system looks first upon power on

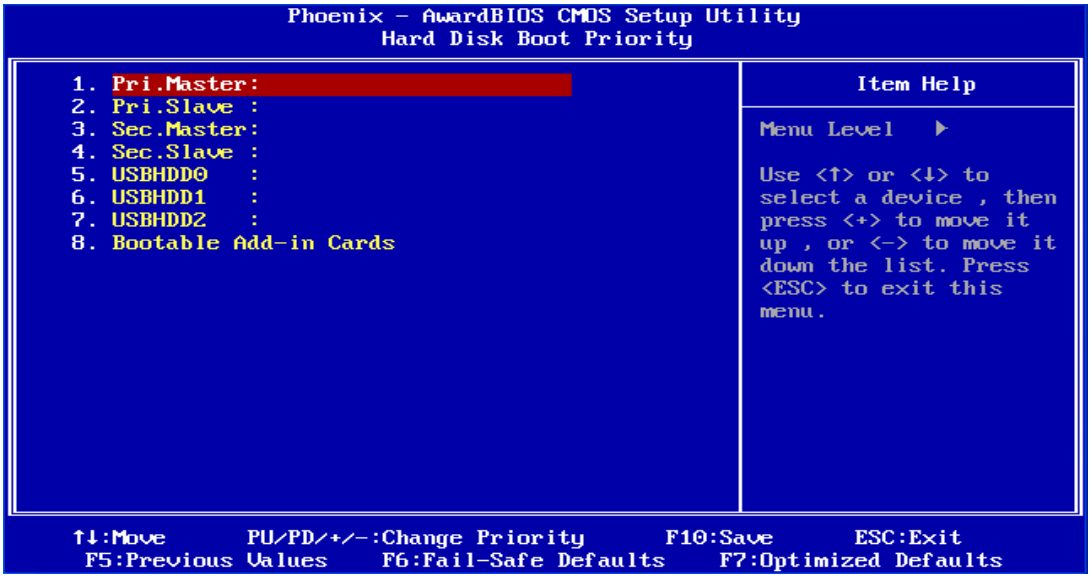

- **Virus Warning**

This option may flash on the screen. During and after the system boots up, any attempt to write to the boot sector or partition table of the hard disk drive will halt the system and the following error message will appear, in the mean time, you can run an anti-virus program to locate the problem.

Available Options: Disabled, Enabled

Default setting: Disabled

- **CPU L1& L2 Cache**

This functions speeds up System access. The CPU has an internal cache.

Available options: Disabled, Enabled

Default setting: Enabled

- **Quick Power On Self Test**

This option speeds up Power On Self Test (POST) after you power on the computer. If it is set to Enable, BIOS will shorten or skip some items' checks during POST.

Available options: Disabled, Enabled

Default setting: Enable

- **First /Second /Third/Boot Other Device/ Boot Device**

This field specifies which device the system looks first upon power on.

Available options: Floppy, LS120, HDD, CDROM, ZIP100, USB-FDD, USB-ZIP, USB-CDROM, LAN and Disable

Default setting: HDD, CDROM, LAN

- **Boot Up NumLock status**

This field is used to activate the Num Lock function upon system boot. If the setting is on, after a boot, the Num Lock light is lit, and user can use the number key.

Available options: On, Off

Default setting: On

- **Gate A20 Option**

This item is chosen as <Normal>, the A20 signal is controlled by keyboard controller or chipset hardware.

Available options: Normal, Fast

Default setting: Normal

➢ **Typematic rate Setting**

This function specifies the keystroke repeat rate when a key is pressed and held down.

Available options: Disable, Enable

Default setting: Disable

■ ***Typematic Rate (Chars/Sec)***

Typematic Rate sets the rate at which characters on the screen repeat when a key is pressed and held down.

Available options: 6, 8, 10, 12, 15, 20, 24, or 30 characters per second

Default setting: 6

■ ***Typematic Delay (m-Sec)***

The number selected indicates the time period between two identical characters appearing on screen.

Available options: 250,500 750 and 1000

Default setting: 250

➢ **Security Option**

This field enables password checking every time the computer is powered on or every time the BIOS Setup is executed. If ***Always*** is chosen, a user password prompt appears every time and the BIOS Setup Program executes and the computer is turned on. If ***Setup*** is chosen, the password prompt appears if the BIOS executed.

Available options: Setup, Always

Default setting: Setup

➢ **OS Select For DRAM > 64MB**

If OS2 operating system is used, and the system RAM is over 64MB, please select yes. Otherwise, select Non-OS2.

Available options: OS2, Non-OS2

Default setting: No

- **Report No FDD for Win95**

This option allows Windows 95 to share IRQ6 (assigned to a floppy disk drive) with other peripherals in case the driver does not exist.

Available options: Enabled, Disabled

Default setting: Disabled

Chipset Features Setup

This section describes the configuration of the board's chipset features.

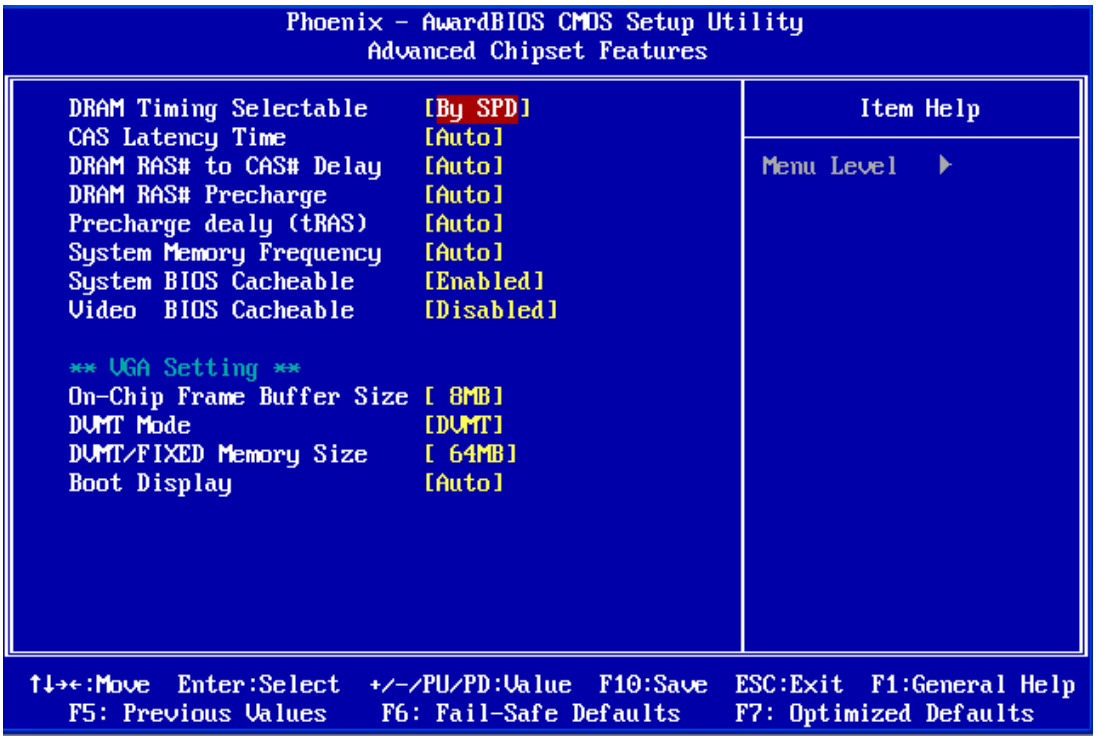

➢ **DRAM Timing Selectable**

SPD represents Serial Presence Detect. It is an 8-bit, 2048 bits EEPROM, built on the SDRAM for different frequencies. If the installed DRAM supports SPD function, select SPD. If not, you can select based on other access time of the DRAM.

Available Options: By SPD, Manual

Default setting: By SPD

➢ **CAS Latency Time**

This field specifies the latency for the Synchronous DRAM system memory signals.

Available Options: 2.5, 2

Default setting: 2.5

➢ **DRAM RAS# to CAS# delay**

This field specifies the length of the delay inserted between RAS and CAS signals of the Synchronous DRAM system access cycle when SDRAM is installed.

Available Options: 3, 2

Default setting: 3

- **DRAM RAS# Precharge**

This field specifies the length of the RAS pre-charge part of the Synchronous DRAM access cycle when SDRAM is installed.

Available Options: 3, 2

Default setting: 3

- **Precharge Delay**

This field specifies control the number of DRAM for an access cycles.

Available Options: 7,6,5

Default setting: 7

- **System Memory Frequency**

This specifies the DD2-RAM memory clock frequency.

Available Options: Auto, 333MHz, 400MHz, and 533MHz

Default setting: Auto

- **System BIOS Cacheable**

This field specifies selecting enabled allows caching of the system BIOS ROM at F0000H ~ FFFFFH, resulting in better system performance.

Available Options: Disabled, Enabled

Default setting: Enabled

- **Video BIOS Cacheable**

This field specifies selecting enabled allows caching of the video BIOS ROM, resulting in better system performance. However, if any program writes to this memory area, a system error may result.

Available Options: Disabled, Enabled

Default setting: Enabled

- **VGA Setting**

- ***On-Chip Frame Buffer Size***

This field specifies which VGA display memory. You can select either Video memory on the VGA. There are setting share onboard memory.

Available Options: 1MB, and 8MB

Default setting: 8MB

- ***DVMT Mode Select***

This field is the *DVMT mode* is memory that is dynamically allocated based on memory requests made by application and are released back to the system once the requesting application has been terminated. *Fixed mode* is non-contiguous page locked memory allocated during driver initialization to provide a static amount of memory.

Available Options: Disabled, Fixed Mode, and DVMT Mode

Available Options: DVMT Mode

- ***DVMT/FIXED Memory Size***

This field specifies allows you to select the maximum amount of graphics memory to be shared with the system memory.

Available Options: 64MB, and 128MB

Available Options: 64MB

- ***Boot Display Device***

This field specifies which VGA display will be used when the system is boot. You can select either the Panel (FP8080 Panel) or the Both(CRT + Panel PC) booting on the CRT and FP8080 dual Display.

Available Options: Auto, CRT, Panel, and Both

Available Options: Auto

Integrated Peripherals

This section describes the function of peripheral features.

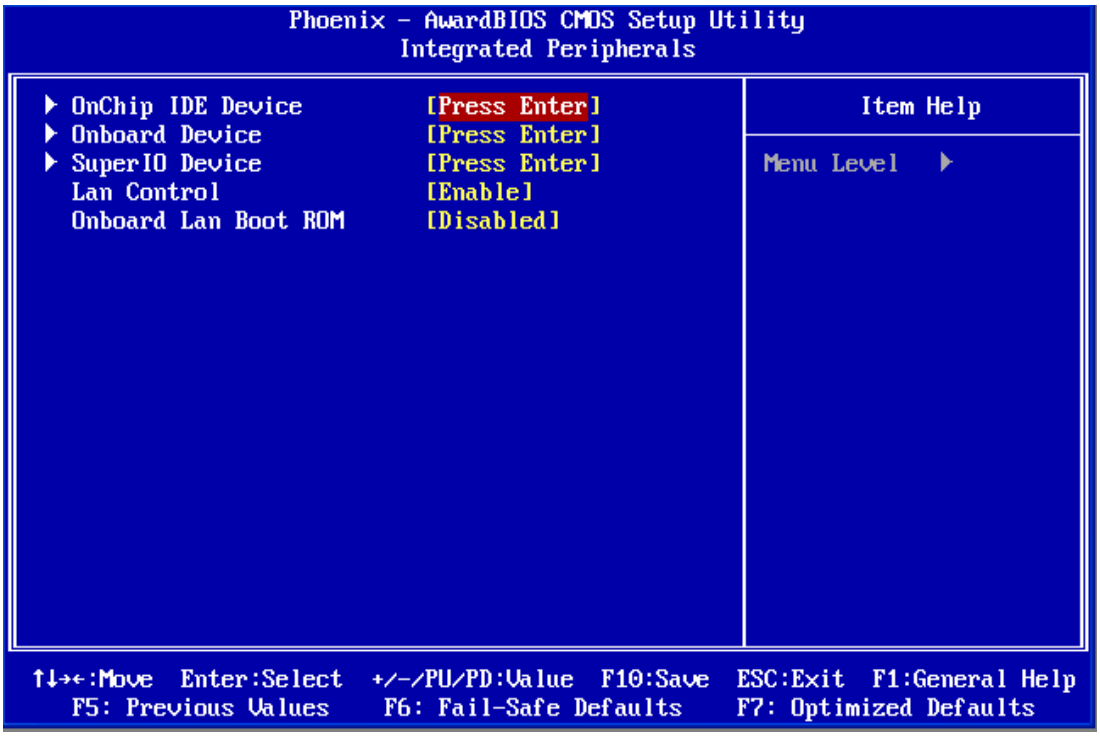

➢ **OnChip IDE Device**

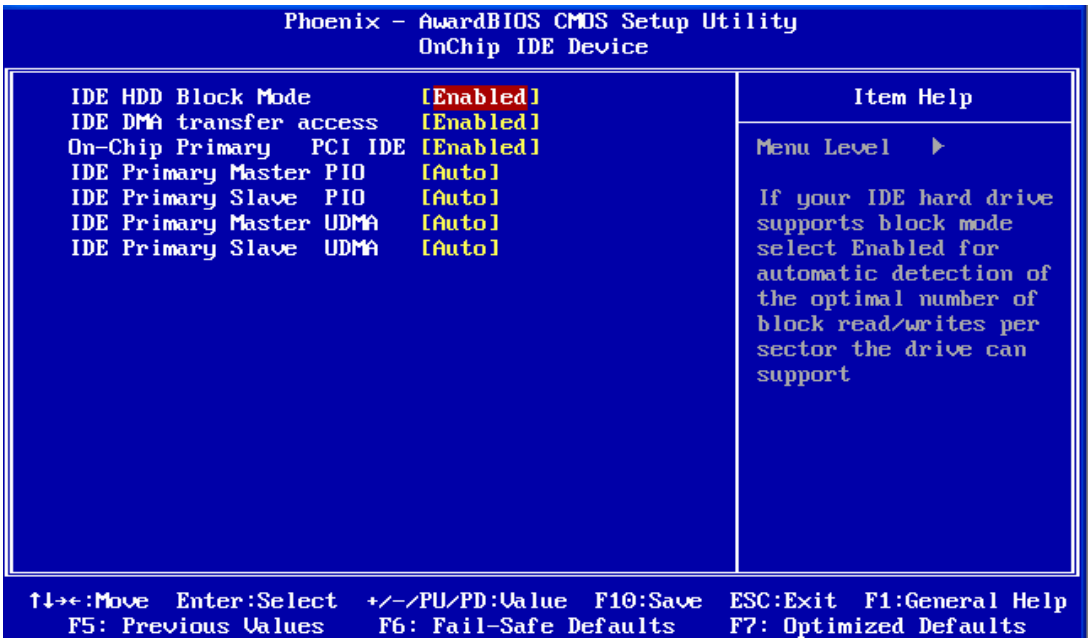

- ***IDE HDD Block Mode***

This option allows your hard disk controller to use the fast block mode to transfer data to and from your hard disk drive (HDD).

Available Options: Disabled, Enabled

Default setting: Enabled

- ***IDE DMA Transfer access***

This option allows your hard disk controller to use the fast DMA mode to transfer data to and from your hard disk drive (HDD).

Available Options: Disabled, Enabled

Default setting: Enabled

- ***OnChip Primary PCI IDE***

This field specifies the IDE channel that can be applied when using IDE hard disk connector.

Available Options: Disabled, Enabled

Default setting: Enabled

- ***IDE Primary/Secondary Master/Slave PIO***

IDE hard drive controllers can support up to two separate hard drives. These drives have a master/slave relationship, which is determined by the cabling configuration used to attach them to the controller. Your system supports one IDE controller – a primary and a secondary – so you have the ability to install up to four separate hard disks.
PIO means Programmed Input/Output. Rather than have the BIOS issue a series of commands to affect a transfer to or from the disk drive, PIO allows the BIOS to tell the controller what it wants and then let the controller and the CPU perform the complete task by them. This is simpler and more efficient (and faster). Your system supports five modes, numbered from 0 to 4, which primarily differ in timing. When Auto is selected, the BIOS will select the best available mode.

- ***IDE Primary/Secondary Master/Slave UMDA***

Ultra DMA/33 implementation is possible only if your IDE hard drive supports it and the operating environment includes a DMA driver). If you hard drive and your system software both support Ultra DMA/33, select Auto to enable This option allows your hard disk controller to use the fast block mode to transfer data to and from your hard disk drive (HDD).

➢ OnBoard Device

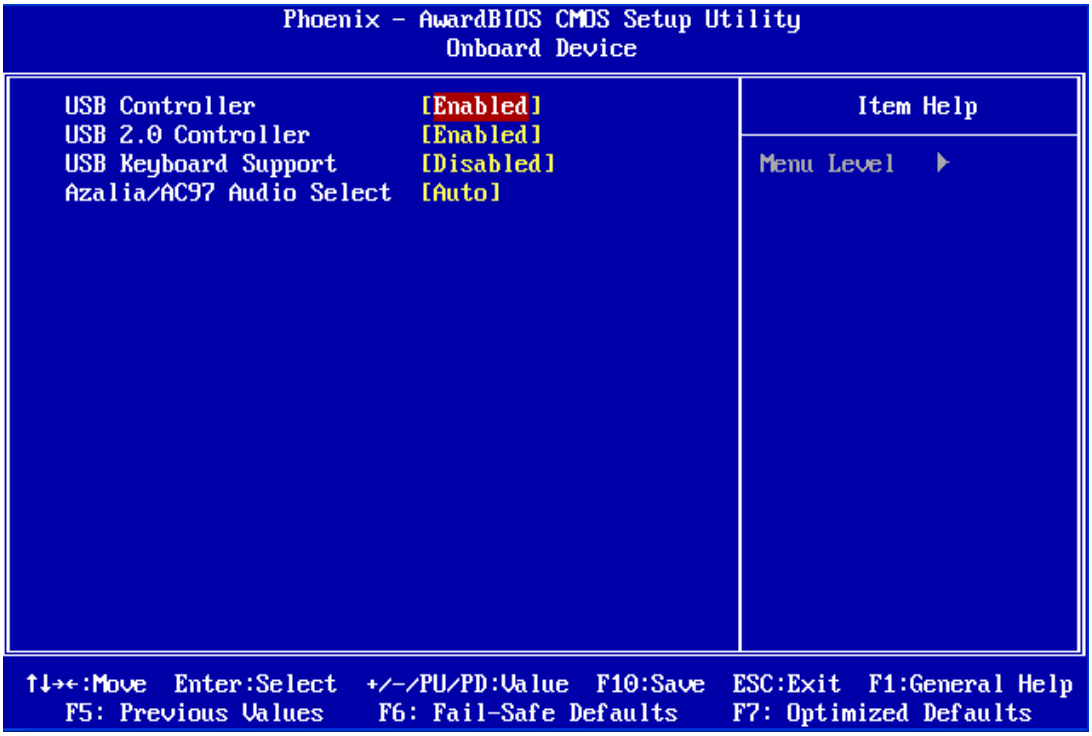

■ ***USB Controller***

Select Enabled, if a USB device is installed to the system. If Disabled are selected, the system will not be able to use a USB device.

Available Options: Disabled, Enabled

Default setting: Enabled

■ ***USB 2.0 Controller***

This field is select Enabled or Disable the USB 2.0 controllers

Available Options: Disabled, Enabled

Default setting: Enabled

■ ***USB Keyboard Support***

Select All Device if a USB device is installed to the system. If Disabled are selected, the system will not be able to use a USB device.

Available Options: Enabled, and All Disabled

Default setting: Disabled

■ ***Azalia/AC'97 Audio Select***

This field specifies the internal Audio Control.

Available Options: Auto, Azalia, AC97 Only, All Disabled

Default setting: Auto

➢ **SuperIO Device**

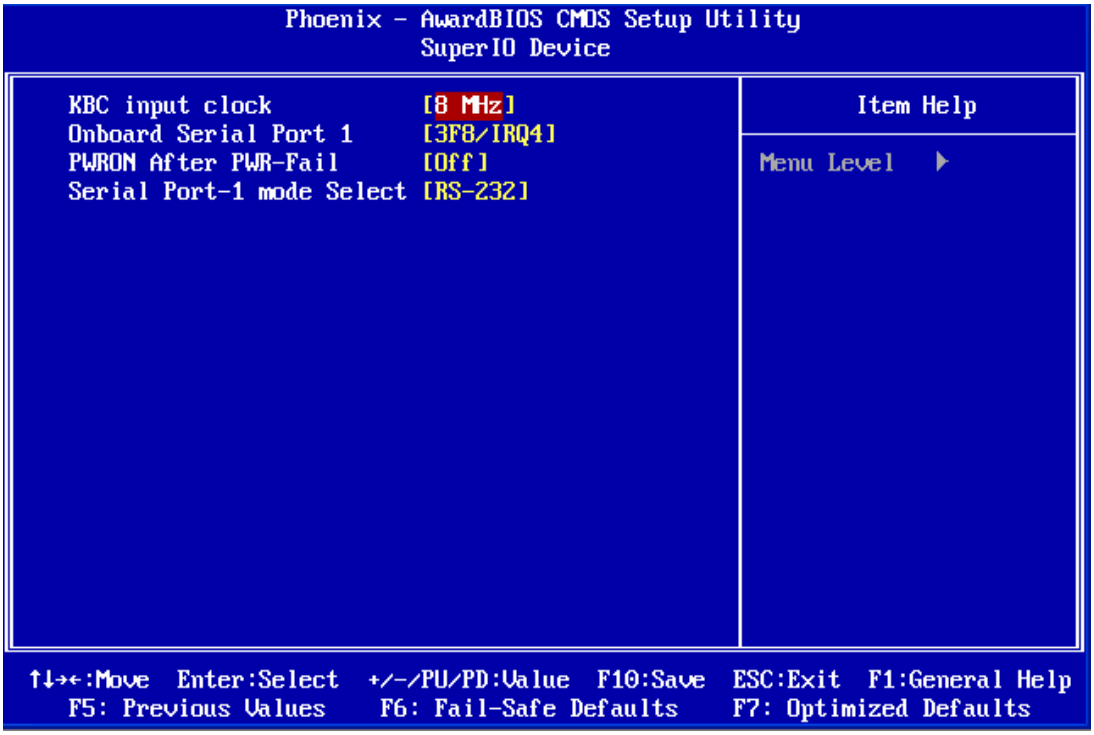

■ ***KBC input Clock***

This field is select Keyboard clock rate selecting 6MHz/8MHz/12MHz/16MHz Controller.

Available Options: 6MHz, 8MHz, 12MHz, and 16MHz

Default setting: 8MHz

■ ***OnBoard Serial Port 1***

These fields select the I/O port address for each Serial port.

Available Options: Disabled, 3F8H/IRQ4, 3E8H/IRQ4, 2E8H/IRQ3 and Auto.

Default setting: 3F8/IRQ4

- ***PWRON After PWR-Fail***

This field specifies the option controls how the PC will behave once power is restored following a power outage (or other unexpected or ungraceful shutdown). The "Former-Sts" option returns the PC to the state in effect at the time the power outage or shutdown occurred. Assign this option the "On" value to reboot automatically; assign the "Off" value to leave the machine powered down.

Available Options: Off, On, and Former-Sts

Default setting: Off

- ***Serial Port 1 Mode Select***

These fields item can select RS-232, RS-422 and RS-485 of select Serial port 1.

Available Options: RS-232, RS-422 and RS485

Default setting: RS-232

➢ **LAN Controller**

This field specifies the Enable or Disable of the onboard (Giga-1000M) G-LAN/LAN (100M) chip.

Available Options: Disabled, Enabled

Default setting: Enabled

➢ **Onboard LAN Boot ROM**

This field specifies the PXE boot ROM of the onboard LAN chip.

Available Options: Disabled, Enabled

Default setting: Disabled

POWER MANAGEMENT

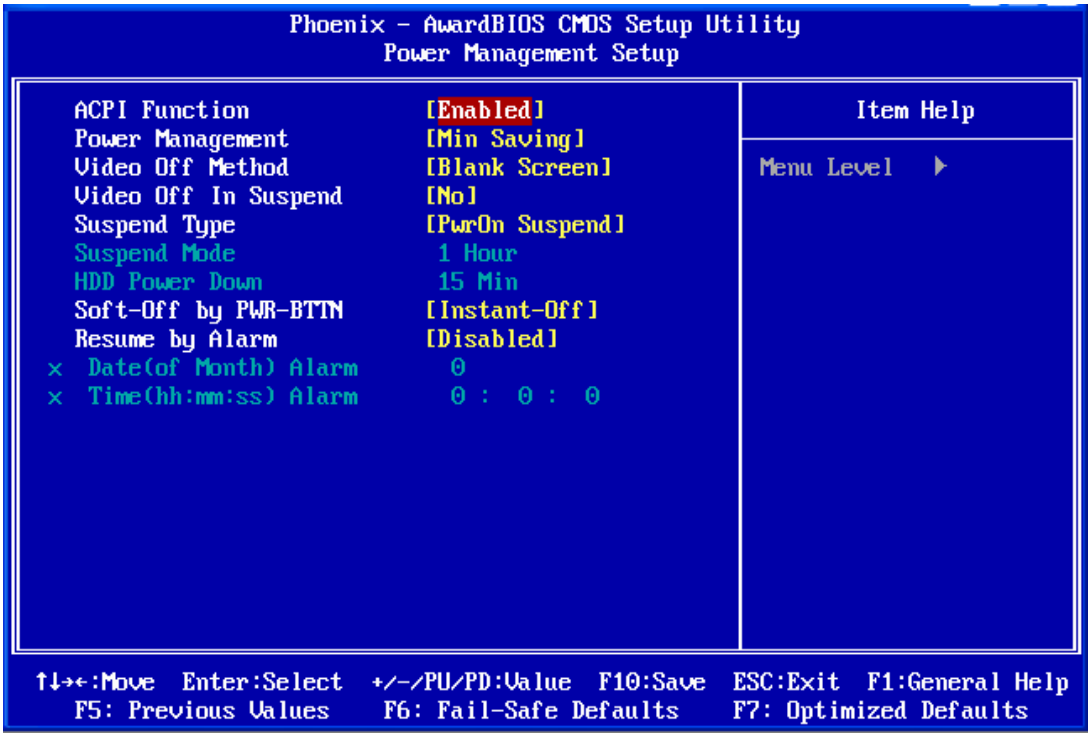

- **ACPI Function**

This filed specifies allow you enable Advanced Configuration and Power Management. When you use Windows/OS standby mode can set to enable.

Available Options: Disabled, Enabled

Default setting: Enabled

- **Power Management**

Select Enabled to activate the chipset Power Management and APM (Advanced Power Management) features.

Available Options: User Define, Min Saving, Max Saving

Default setting: User Define

- **Video Off Method**

When enabled, this feature allows the VGA adapter to operate in a power saving mode.

V/H SYNC + Blank - This selection will cause the system to turn off the vertical and horizontal synchronization ports and write blanks to the video buffer.

Blank Screen - This option only writes blanks to the video buffer.

DPMS - Select this option if your monitor supports the Display Power Management Signal (DPMS) standard of the Video Electronics Standards to select video power management values.

Available Options: V/H SYNC + Blank, Blank Screen and DPMS

Default setting: DPMS

➢ **Suspend Type**

This field defines the continuous idle time before the system enters PwrOn Suspend.

Available Options: Stop Grant and PwrOn Suspend

Default setting: Stop Grant

■ ***Suspend Mode***

This field specifies the When enabled and after the set time of system inactivity, all devices except the CPU will be shut off.

Available Options: Disabled, 1 Minute, 2 Minute, 4 Minute, 12 Minute, 20 Minute, 30 Minute, 40 Minute and 1 Hour

Default setting: Disabled

■ ***HDD Power Down***

This field specifies the length of a period of system inactivity hard disk, while in full power on state. When this length of time expires, the system enters Suspend power state.

Available Options: Disabled, 1 Minute, 2 Minute, 4 Minute, and up to 60 Minute.

Default setting: Disabled

➢ **Soft-Off By PWR-BTTN**

Pressing the power button for more than 4 seconds forces the system to enter the Soft-Off state when the system has “hung”. The choices are Delay 4 Sec and Instant-Off.

Available Options: Instant-Off and Delay 4 sec.

Default setting: Instant-Off

➢ **Resume By Alarm**

This field specifies the RTC alarm to be turned off by extra software.

Available Options: Disabled, Enabled

Default setting: Disabled

- ***Date (Of Month) Alarm***

This field specifies the date of the RTC alarm.

Available Options: 1, 31

Default setting: 15

- ***Time (hh:mm:ss) Alarm***

This field specifies the hour/ minute/second of the RTC alarm.

Available Options: 1-24/0-60/0-60

Default setting: 00

PnP/PCI Configurations

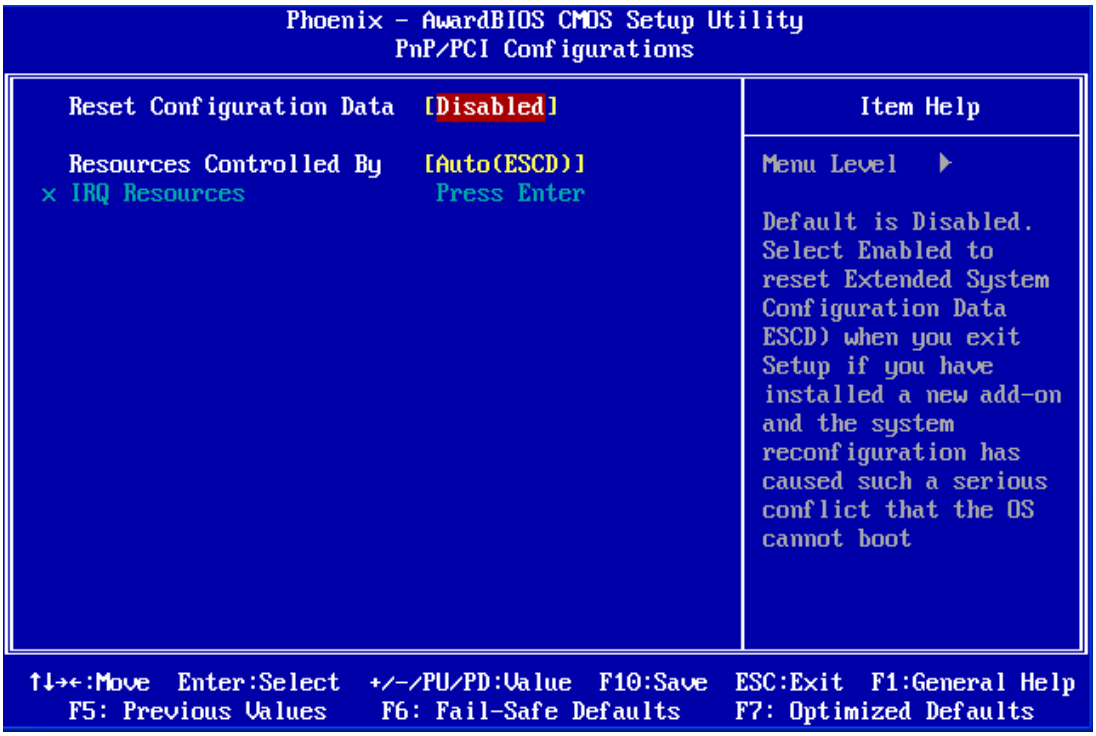

- **Reset Configuration Data: Enable, Disable**

If you select Enable to reset Extended System Configuration Data (ESCD) when you exit setup is you have installed a new add-on and the system reconfiguration has caused such a serious conflict that the operation operating system cannot boot.

Available Options: Enabled, Disabled

Default setting: Disabled

- **Resources Controlled By: Auto [ESCD], Manual**

If you select Auto, all the interrupt request (IRQ), DMA assignment, and Used DMA fields disappear, as the BIOS automatically assigns then. The default value is "Manual ".

Available Options: Auto[ESD], and Manual

Default setting: Auto[ESD]

➢ X IRQ Resources

```
Phoenix - AwardBIOS CMOS Setup Utility
IRQ Resources

IRQ-3  assigned to        [PCI Device]        Item Help
IRQ-4  assigned to        [PCI Device]
IRQ-5  assigned to        [PCI Device]        Menu Level  ▶
IRQ-7  assigned to        [PCI Device]
IRQ-9  assigned to        [PCI Device]        Legacy ISA for devices
IRQ-10 assigned to        [PCI Device]        compliant with the
IRQ-11 assigned to        [PCI Device]        original PC AT bus
IRQ-12 assigned to        [PCI Device]        specification, PCI/ISA
IRQ-14 assigned to        [PCI Device]        PnP for devices
IRQ-15 assigned to        [PCI Device]        compliant with the
                                              Plug and Play standard
                                              whether designed for
                                              PCI or ISA bus
                                              architecture

↑↓→←:Move  Enter:Select  +/-/PU/PD:Value  F10:Save  ESC:Exit  F1:General Help
  F5: Previous Values    F6: Fail-Safe Defaults    F7: Optimized Defaults
```

■ ***IRQ-n Assigned: PCI Device and Reserved***

You may assign each system interrupt a type, depending on the type of device using the interrupt.

PC Health Status

On the Hardware Monitor Setup screen, you can monitor the system temperature, CPU voltage, and CPU fan speed...

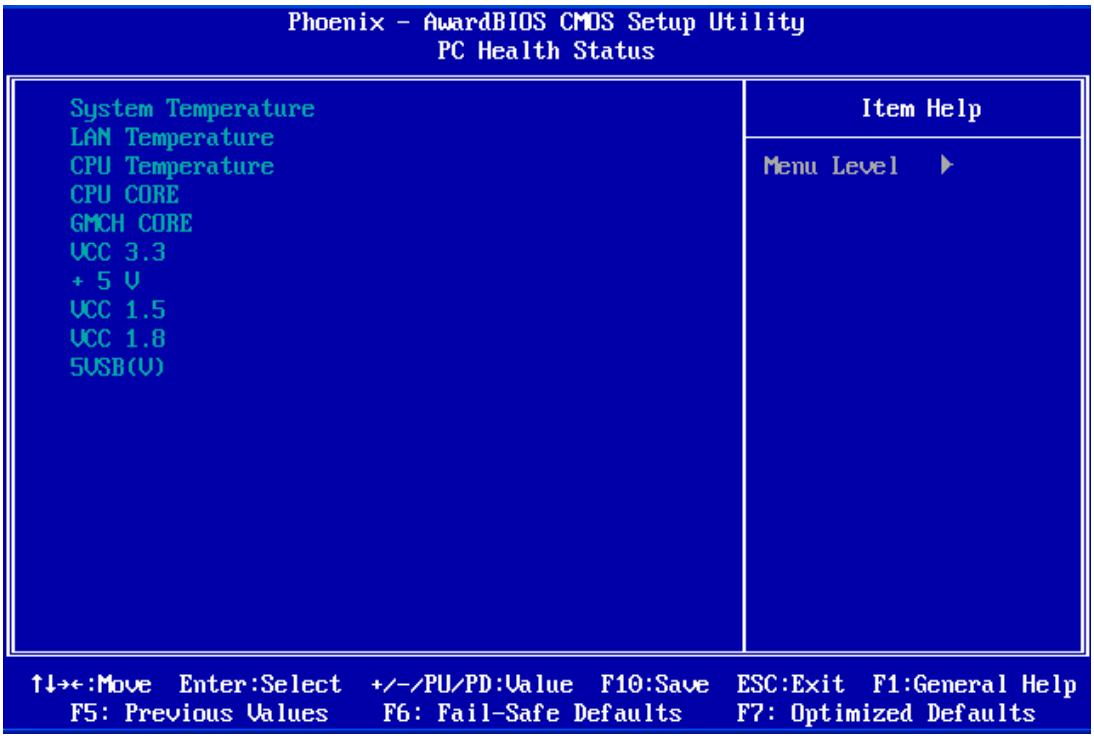

➢ **System Hardware Monitor**

In this field, you can monitor or detect the followings items. These items are view-only and cannot be changed.

- System Temperature
- LAN Temperature
- CPU Temperature
- CPU CORE
- GMCH CORERE
- VCC 3.3
- +5 V
- VCC 1.5
- VCC 1.8
- 5VSB (V)

Chapter 4 Software Installation

The enclosed CD diskette includes FP8080 VGA, Audio, System, LAN and Touch screen driver. To install and configure you FP8080 system, you need to perform the following steps.

System Driver

WIN 2000/XP Driver

Installs 915GME or 910GMLE Chipset, IRQ Routing, USB, AGP Driver and SATA Drive.

Step 1: To install the 915GME driver, insert the CD ROM into the CD ROM device, and enter DRIVER>SysChip>915GME>2KXP.

Step 2: Execute 915GME.exe file.

Step 3: The screen shows the SETUP type. Press any key to enter the main menu.

Step 4: As the setup is completed, the system will generate the message as follows.

Yes, I want to restart my computer now. Installation is done!

No, I will restart my computer later.

System must be restart then complete the installation.

VGA Driver

WIN 2000/XP Driver

Step 1: To install the VGA driver, insert the CD ROM into the CD ROM device, and enter DRIVER>VGA>915GME>2KXP.

Step 2: Execute SETUP.EXE file.

Step 3: The screen shows the SETUP type. Press any key to enter the main menu.

Step 4: As the setup is completed, the system will generate the message as follows.

Yes, I want to restart my computer now. Installation is done!

No, I will restart my computer later.

System must be restart then complete the installation.

Step 5: In the WINDOWS2000/XP, you can find the <DISPLAYL> icon located in the {CONTROL PANEL} group.

Step 6: Adjust the <Refresh Rate>, <Font size> and <Resolution>.

Audio Driver

WIN 2000/XP

Step 1: To install the AUDIO driver, insert the CD ROM into the CD ROM device, and enter DRIVER>AUDIO>ALC888>WIN2K&XP.

Step 2: Execute SETUP.exe file.

Step 3: The screen shows the SETUP type. Press any key to enter the main menu.

Step 4: As the setup is completed, the system will generate the message as follows.

Yes, I want to restart my computer now. Installation is done!

No, I will restart my computer later.

System must be restart then complete the installation.

Note: In the DRIVER>AUDIO>ALC888> WIN2K&XP directory, a Readme.txt file is included to provide installation information.

LAN Driver (Intel 82573L)

WIN 2000/XP

Step 1: To install the LAN driver, insert the CD ROM into the CD ROM device, and enter DRIVER>LAN>82573L. If your system is not equipped with a USB CD ROM device, copy the LAN driver from the USB CD ROM to CF.

Step 2: Execute 82573L.exe file.

Note: In the LAN>82573L directory, has supports Windows 2K/XP LAN driver.

Touch Screen Driver (FP8080T/FP8080BT)

USB Device Driver for WIN2000/XP

Step 1: To install the Touch Screen driver, insert the CD ROM into the CD ROM device, and enter DRIVER>TouchScreen>USB>PM6500.

Step 2: Execute Setup.exe file. Just click **[Next >]** button to continue installation.

Step 3: Then A License Agreement appears. Click "**I Agree…**" and "**Next**"

Step 4: Windows XP will prompt a warning message before driver certificated. Now, Press **[Continue Anyway]** to continue installation.

Step 5: As the setup is completed, The "InstallShield Wizard Completed" appears. Click "**Finish**"

BIOS Flash Utility

In the <UTILITY> directory, there is the Awdflash.EXE file.

Step 1: Use the Awdflash.EXE program to update the BIOS setting.

Step 2: And then refer to the chapter "BIOS Setup", as the steps to modify BIOS.

Step 3: Now the CPU board's BIOS loaded with are the newest program; user can use it to modify BIOS function in the future, when the BIOS add some functions.

Watchdog Timer

This section describes how to use the Watchdog Timer, including disabled, enabled, and trigger functions.

The FP8080 is equipped with a programmable time-out period watchdog timer. You can use your own program to enable the watchdog timer. Once you have enabled the watchdog timer, the program should trigger the I/O every time before the timer times out. If your program fails to trigger or disable this timer before it times out, e.g. because of a system hang-up, it will generate a reset signal to reset the system. The time-out period can be programmed to be set from 1 to 255 seconds or minutes.

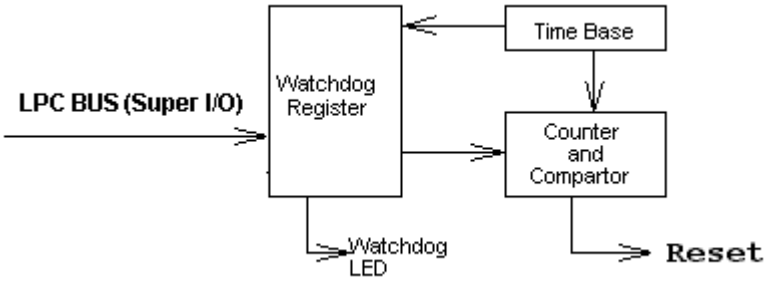

The CD –ROM includes a Watch Dog demo file. In the file, there are 3 execution programs written in different forms. The sub-directories of the file are:

1. WATCHDOG/TURBOC: Library and Test Program written in Turbo C++

The WATCHDOG includes a demonstration program established for users who would like to configure the Watchdog timer by themselves.

Note: In the WATCHDOG>WIN627HG directory, README.TXT file is included to provide demo program information.

Watchdog Timer Setting

The watchdog timer is a circuit that may be used from your program software to detect system crashes or hang-ups. The watchdog timer is automatically disabled after reset.

Once you have enabled the watchdog timer, your program must trigger the watchdog timer every time before it times out. After you trigger the watchdog timer, it will be set to non-zero value to watchdog counter and start to count down again. If your program fails to trigger the watchdog timer before time-out, it will generate a reset pulse to reset the system.

The factor of the watchdog timer time-out constant is approximately 1 second. The period for the watchdog timer time-out is between 1 to FF timer factors.

If you want to reset your system when watchdog times out, the following table listed the relation of timer factors between time-out periods.

Time Factor	Time-Out Period (Seconds)	Time-Out Period (Minutes)
1	1	1
2	2	2
3	3	3
4	4	4
5	5	5
“	“	“
“	“	“
“	“	“
FF	FF	FF

Watchdog Timer Enabled

To enable the watchdog timer, you have to output a byte of timer factor to the watchdog register whose address is 2Eh and data port is 2fH. The following is an Assemble program, which demonstrates how to enable the watchdog timer and set the time-out period at 28 seconds.

```
;-----------------------------------------------------------------------------------------
; Enter the extended function mode, interruptible double-write
;-----------------------------------------------------------------------------------------
Mov     dx, 2eh         ; Enter to extended function mode
Mov     al, 87h
Out     dx,al
Out     dx,al
Mov     al,07h
Out     dx,al
;-----------------------------------------------------------------------------------------------------
; Logical device 8, configuration register CRF5 Bit 3,CRF6 Bit 0~7
;-----------------------------------------------------------------------------------------------------
Mov     dx,2fh
Mov     al,08h          ; Select Logical Device 8 of watchdog timer
Out     dx,al
Mov     dX,2eh
Mov     al,0f5h         ;Set second as counting unit
Out     dx,al
Mov     dx,2fh
In      al,dx
Or      al,c0           ; Trigger P/W LED.
And     al,not c8h      ;Set Second.
;And    al,c8h          ;Set Minute.
Out     dx,al
Mov     dx,2eh
Mov     al,0f6h
Out     dx,al
Mov     dx,2fh
Mov     al,28h          ; Set timeout interval as 28seconds and start counting
Out     dx,al
;-----------------------------------------
; Exit extended function mode
;-----------------------------------------
Mov     dx,2eh
Mov     al,0aah
Out     dx,al
```

Watchdog Timer Trigger

After you enable the watchdog timer, your program must write the same factor as enabling to the watchdog register at least once every time-out period to its previous setting. You can change the time-out period by writing another timer factor to the watchdog register at any time, and you must trigger the watchdog before the new time-out period in next trigger.

Watchdog Timer Disabled

To disable the watchdog timer, simply write a 00H to the watchdog register.

```
;-----------------------------------------------------------------------------------------
; Enter the extended function mode, interruptible double-write
;-----------------------------------------------------------------------------------------
Mov     dx,2eh          ; Enter to extended function mode
Mov     al,87h
Out     dx,al
Out     dx,al
;-----------------------------------------------------------------------------------------------------------------------
; Logical device 8, configuration register CRF5 Bit 3(Sec./Min.), CRF6 Bit 0~7 (Count.)
;-----------------------------------------------------------------------------------------------------------------------
Mov     al,07h
Out     dx,al
Mov     dx,2fh
Mov     al,08h          ; Select Logical Device 8 of watchdog timer
Out     dx,al
Mov     dX,2eh
Mov     al,0f5h         ;Set second as counting unit
Out     dx,al
Mov     dx,2fh
In              al,dx
And     al,not c8h      ;Set Second or Minute.
Out     dx,al
Mov     dx,2eh
Mov     al,0f6h
Out     dx,al
Mov     dx,2fh
Mov     al,00h          ; Set Watchdog Timer Disabled
Out     dx,al
;-----------------------------------------
; Exit extended function mode
;-----------------------------------------
Mov     dx,2eh          ;Exit the extended function mode
Mov     al,0aah
Out     dx,al
```

Programming RS-485

The majority communicative operation of the RS-485 is in the same of the RS-232. When the RS-485 precedes the transmission, which needs control the TXC signal, and the installing, steps are as follows:

Step 1: Enable TXC

Step 2: Send out data

Step 3: Waiting for data empty

Step 4: Disable TXC

Note: Please refer to the section of the "Serial Ports" in the Chapter 5 "Technical Reference" for the detail description of the COM port's register.

Initialize COM port

Step 1: Initialize COM port in the receiver interrupt mode, and /or transmitter interrupt mode. (All of the communication protocol buses of the RS-485 are in the same.)

Step 2: Disable TXC (transmitter control), the bit 0 of the address of offset+4 just sets "0".

NOTE: Control the FP8080 system "DTR" signal to the RS-485 TXC communication.

Send out one character (Transmit)

Step 1: Enable TXC signal, and the bit 0 of the address of offset+4 just sets “1”.

Step 2: Send out the data. (Write this character to the offset+0 of the current COM port address)

Step 3: Wait for the buffer’s data empty. Check transmitter holding register (THRE, bit 5 of the address of offset+5), and transmitter shift register (TSRE, bit 6 of the address of offset+5) are all sets must be “0”.

Step 4: Disabled TXC signal, and the bit 0 of the address of offset+4 sets “0”

Send out one block data (Transmit – the data more than two characters)

Step 1: Enable TXC signal, and the bit 0 of the address of offset+4 just sets “1”.

Step 2: Send out the data. (Write all data to the offset+0 of the current COM port address)

Step 3: Wait for the buffer’s data empty. Check transmitter holding register (THRE, bit 5 of the address of offset+5), and transmitter shift register (TSRE, bit 6 of the address of offset+5) are all sets must be “0”.

Step 4: Disabled TXC signal, and the bit 0 of the address of offset+4 sets “0”

Receive data

The RS-485’s operation of receiving data is in the same of the RS-232’s.

Basic Language Example

a. Initial 86C450 UART

```
10      OPEN “COM1:9600,m,8,1”AS #1 LEN=1
20      REM Reset DTR
30      OUT &H3FC, (INP(%H3FC) AND &HFA)
```

```
40      RETURN
```

b. Send out one character to COM1

```
10      REM Enable transmitter by setting DTR ON
20      OUT &H3FC, (INP(&H3FC) OR &H01)
30      REM Send out one character
40      PRINT #1, OUTCHR$
50      REM Check transmitter holding register and shift register
60      IF ((INP(&H3FD) AND &H60) >0) THEN 60
70      REM Disable transmitter by resetting DTR
80      OUT &H3FC, (INP(&H3FC) AND &HEF)
90      RETURN
```

c. Receive one character from COM1

```
10      REM Check COM1: receiver buffer
20      IF LOF(1)<256 THEN 70
30      REM Receiver buffer is empty
40      INPSTR$"
50      RETURN
60      REM Read one character from COM1: buffer
70      INPSTR$=INPUT$(1,#1)
80      RETURN
```

NOTE: The example of the above program is based on COM1 (I/O Address 3F8h). The RS-485 of the FP8080 uses COM1. If you want to program it, please refer to the BIOS Setup for COM1 address setup.

Chapter 5 Technical Reference

This section outlines the errors that may occur when you operate the system, and also gives you the suggestions on solving the problems.

Topic include:

- Trouble Shooting for
  - Post Beep & Error Messages
  - LCD Display and Touch Screen
- Technical Reference

Trouble Shooting

Post Beep and Error Messages

The following information informs the Post Beep & error messages. Please adjust your systems according to the messages below. Make sure all the components and connectors are in proper position and firmly attached. If the errors still exist, please contact with your distributor for maintenance.

➢ **POST BEEP**

Currently there are two kinds of beep codes in BIOS setup.

- One indicates that a video error has occurred and the BIOS cannot initialize the video screen to display any additional information. This beep code consists of a single long beep followed by three short beeps.
- The other indicates that an error has occurred in your DRAM. This beep code consists of a constant single long beep.

➢ **CMOS BATTERY FAILURE**

When the CMOS battery is out of work or has run out, the user has to replace it with a new battery.

- **CMOS CHECKSUM ERROR**

This error informs that the CMOS has corrupted. When the battery runs weak, this situation might happen. Please check the battery and change a new one when necessary.

- **DISK BOOT FAILURE**

When you can't find the boot device, insert a system disk into Drive A and press < Enter >. Make sure both the controller and cables are all in proper positions, and also make sure the disk is formatted. Then reboot the system.

- **DISKETTE DRIVES OR TYPES MISMATCH ERROR**

When the diskette drive type is different from CMOS, please run setup or configure the drive again.

- **ERROR ENCOUNTERED INITIALIZING HARD DRIVE**

When you can't initialize the hard drive, ensure the following things:

1. The adapter is installed correctly
2. All cables are correctly and firmly attached
3. The correct hard drive type is selected in BIOS Setup

- **ERROR INITIALIZING HARD DISK CONTROLLER**

When this error occurs, ensure the following things:

1. The cord is exactly installed in the bus.
2. The correct hard drive type is selected in BIOS Setup
3. Whether all of the jumpers are set correctly in the hard drive

- **FLOPPY DISK CONTROLLER ERROR OR NO CONTROLLER PRESENT**

When you cannot find or initialize the floppy drive controller, please ensure the controller is in proper BIOS Setup. If there is no floppy drive installed, ensure the Diskette Drive selection in Setup is set to NONE.

- **KEYBOARD ERROR OR NO KEYBOARD PRESENT**

When this situation happens, please check keyboard attachment and no keys being pressed during the boot. If you are purposely configuring the system without a keyboard, set the error halt condition in BIOS Setup to HALT ON ALL, BUT KEYBOARD. This will cause the BIOS to ignore the missing keyboard and continue the boot procedure.

- **MEMORY ADDRESS ERROR**

When the memory address indicates error, you can use this location along with the memory map for your system to find and replace the bad memory chips.

- **MEMORY SIZE HAS CHANGED**

Memory has been added or removed since last boot. In EISA mode, use Configuration Utility to re-configure the memory configuration. In ISA mode enter BIOS Setup and enter the new memory size in the memory fields.

- **MEMORY VERIFYING ERROR**

It indicates an error verifying a value is already written to memory. Use the location along with your system's memory map to locate the bad chip.

- **OFFENDING ADDRESS MISSING**

This message is used in connection with the I/O CHANNEL CHECK and RAM PARITY ERROR messages when the segment that has caused the problem cannot be isolated.

- **REBOOT ERROR**

When this error occurs that requires you to reboot. Press any key and the system will reboot.

- **SYSTEM HALTED**

Indicates the present boot attempt has been aborted and the system must be rebooted. Press and hold down the CTRL and ALT keys and press DEL.

Touch Screen

The following information informs the LCD and touch serene driver. Please adjust your systems according to the messages below. Make sure all the components and connectors are in proper position and firmly attached. If the errors still exist, please contact with your distributor for maintenance.

- Windows might cause Page Fault blue screen when keep touching the touch panel during system booting up for USB model.

Workaround:

- Do not keep touch the touch panel when system booting up.

- USB touch kit driver will not be loaded properly if the panel was kept touched during system booting up in Windows 2000/XP.

Workaround:

- Do not keep touch the touch panel when system booting up.
- Check CMOS BIOS setting, the USB Function must enable.

LCD Display is unstable

- There is no display on the LCD Monitor.

Workaround:

- Make sure the AC-DC power supply indicator on the LCD and Power LED.
- Connector to the external CRT monitor. If you system functions properly with a CRT monitor but it does not function with the Panel PC LCD monitor, check system BIOS to see if there is CRT+LFP (Both) scan for LFP(LCD) OR CRT only and try again. If these is no display., may be problem with you system.

Technical Reference

Physical and Environmental

Temperature: Operating 0°C ~ 50°C

Relative humidity 5 % to 95 % non-condensing

DC-AC adapter

Input AC Voltage Range: 100V~240V/1A, 50Hz ~60Hz

Output DC Voltage: 19V/3.42A/65W Maximal

Surface Temperature of Chassis：

5°C to 45°C (W/HDD)/0°C to 50°C (W/CF card only)

Real-Time Clock and Non-Volatile RAM

The FP8080 contains a real-time clock compartment that maintains the date and time in addition to storing configuration information about the computer system. It contains 14 bytes of clock and control registers and 114 bytes of general purpose RAM. Because of the use of CMOS technology, it consumes very little power and can be maintained for long periods of time using an internal Lithium battery. The contents of each byte in the CMOS RAM are listed below:

Address	Description
00	Seconds
01	Second alarm
02	Minutes
03	Minute alarm
04	Hours
05	Hour alarm
06	Day of week
07	Date of month
08	Month
09	Year
0A	Status register A
0B	Status register B
0C	Status register C
0D	Status register D

Address	Description
0E	Diagnostic status byte
0F	Shutdown status byte
10	Diskette drive type byte, drive A and B
11	Fixed disk type byte, drive C
12	Fixed disk type byte, drive D
13	Reserved
14	Equipment byte
15	Low base memory byte
16	High base memory byte
17	Low expansion memory byte
18	High expansion memory byte
19-2D	Reserved
2E-2F	2-byte CMOS checksum
30	Low actual expansion memory byte
31	High actual expansion memory byte
32	Date century byte
33	Information flags (set during power on)
34-7F	Reserved for system BIOS

CMOS RAM Map

Register	Description
00h -10h	Standard AT-compatible RTC and Status and Status Register data definitions
11h – 13h	Varies
14h	Equipment Bits 7-6 Number of Floppy Drives 00 1 Drive 01 2 Drives Bits 5-4 Monitor Type 00 Not CGA or MDA 01 40x25 CGA 01 2 Drives 80x25 CGA Bits 3 Display Enabled 0 Disabled 1 Enabled Bit 2 Keyboard Enabled 00 Not CGA or MDA 01 40x25 CGA 01 2 Drives 80x25 CGA Bit 1 Math Coprocessor Installed 0 Absent 1 Present Bit 0 Floppy Drive Installed 0 Disabled 1 Enabled
15h	Base Memory (in 1KB increments), Low Byte
16h	Base Memory (in 1KB increments), High Byte
17h	IBM-compatible memory (in 1KB increments), Low Byte
18h	IBM-compatible memory (in 1KB increments), High Byte (max 15 MB)
19h-2Dh	Vaires
2Eh	Standard CMOS RAM checksum, high byte
2Fh	Standard CMOS RAM checksum, low byte
30h	IBM-compatible Extended Memory, Low Byte (POST) in KB
31h	IBM-compatible Extended Memory, High Byte (POST) in KB
32h	Century Byte
33h	Reserved. Do not use
34h	Reserved. Do not use
35h	Low byte of extended memory (POST) in 64 KB
36h	High byte of extended memory (POST) in 64 KB
37h-3Dh	Varies
3Eh	Extended CMOS Checksum, Low Byte (including 34h-3Dh)
3Fh	Extended CMOS Checksum, High Byte (including 34h-3Dh)

Serial Ports

The ACEs (Asynchronous Communication Elements ACE1 to ACE2) are used to convert parallel data to a serial format on the transmit side and convert serial data to parallel on the receiver side. The serial format, in order of transmission and reception, is a start bit, followed by five to eight data bits, a parity bit (if programmed) and one, one and half (five-bit format only) or two stop bits. The ACEs are capable of handling divisors of 1 to 65535, and produce a 16x clock for driving the internal transmitter logic.

Provisions are also included to use this 16x clock to drive the receiver logic, also included in the ACE a completed MODEM control capability, and a processor interrupt system that may be software tailored to the computing time required to handle the communications link.

The following table is a summary of each ACE accessible register

DLAB	Port Address	Register
0	Base + 0	Receiver buffer (read)
		Transmitter holding register (write)
0	Base + 1	Interrupt enable
X	Base + 2	Interrupt identification (read only)
X	Base + 3	Line control
X	Base + 4	MODEM control
X	Base + 5	Line status
X	Base + 6	MODEM status
X	Base + 7	Scratched register
1	Base + 0	Divisor latch (least significant byte)
1	Base + 1	Divisor latch (most significant byte)

- **Receiver Buffer Register (RBR)**

Bit 0-7: Received data byte (Read Only)

- **Transmitter Holding Register (THR)**

Bit 0-7: Transmitter holding data byte (Write Only)

- **Interrupt Enable Register (IER)**

Bit 0: Enable Received Data Available Interrupt (ERBFI)

Bit 1: Enable Transmitter Holding Empty Interrupt (ETBEI)

Bit 2: Enable Receiver Line Status Interrupt (ELSI)

Bit 3: Enable MODEM Status Interrupt (EDSSI)

Bit 4: Must be 0

Bit 5: Must be 0

Bit 6: Must be 0

Bit 7: Must be 0

- **Interrupt Identification Register (IIR)**

Bit 0: "0" if Interrupt Pending

Bit 1: Interrupt ID Bit 0

Bit 2: Interrupt ID Bit 1

Bit 3: Must be 0

Bit 4: Must be 0

Bit 5: Must be 0

Bit 6: Must be 0

Bit 7: Must be 0

- **Line Control Register (LCR)**

Bit 0: Word Length Select Bit 0 (WLS0)

Bit 1: Word Length Select Bit 1 (WLS1)

WLS1	WLS0	Word Length
0	0	5 Bits
0	1	6 Bits
1	0	7 Bits
1	1	8 Bits

Bit 2: Number of Stop Bit (STB)

Bit 3: Parity Enable (PEN)

Bit 4: Even Parity Select (EPS)

Bit 5: Stick Parity

Bit 6: Set Break

Bit 7: Divisor Latch Access Bit (DLAB)

- **MODEM Control Register (MCR)**

Bit 0: Data Terminal Ready (DTR)

Bit 1: Request to Send (RTS)

Bit 2: Out 1 (OUT 1)

Bit 3: Out 2 (OUT 2)

Bit 4: Loop

Bit 5: Must be 0

Bit 6: Must be 0

Bit 7: Must be 0

- **Line Status Register (LSR)**

Bit 0: Data Ready (DR)

Bit 1: Overrun Error (OR)

Bit 2: Parity Error (PE)

Bit 3: Framing Error (FE)

Bit 4: Break Interrupt (BI)

Bit 5: Transmitter Holding Register Empty (THRE)

Bit 6: Transmitter Shift Register Empty (TSRE)

Bit 7: Must be 0

- **MODEM Status Register (MSR)**

Bit 0: Delta Clear to Send (DCTS)

Bit 1: Delta Data Set Ready (DDSR)

Bit 2: Training Edge Ring Indicator (TERI)

Bit 3: Delta Receive Line Signal Detect (DSLSD)

Bit 4: Clear to Send (CTS)

Bit 5: Data Set Ready (DSR)

Bit 6: Ring Indicator (RI)

Bit 7: Received Line Signal Detect (RSLD)

- **Divisor Latch (LS, MS)**

	LS	MS
Bit 0:	Bit 0	Bit 8
Bit 1:	Bit 1	Bit 9
Bit 2:	Bit 2	Bit 10
Bit 3:	Bit 3	Bit 11
Bit 4:	Bit 4	Bit 12
Bit 5:	Bit 5	Bit 13
Bit 6:	Bit 6	Bit 14
Bit 7:	Bit 7	Bit 15

Desired Baud Rate	Divisor Used to Generate 16x Clock
300	384
600	192
1200	96
1800	64
2400	48
3600	32
4800	24
9600	12
14400	8
19200	6
28800	4
38400	3
57600	2
115200	1

Appendix

Dimension

a. FP8080

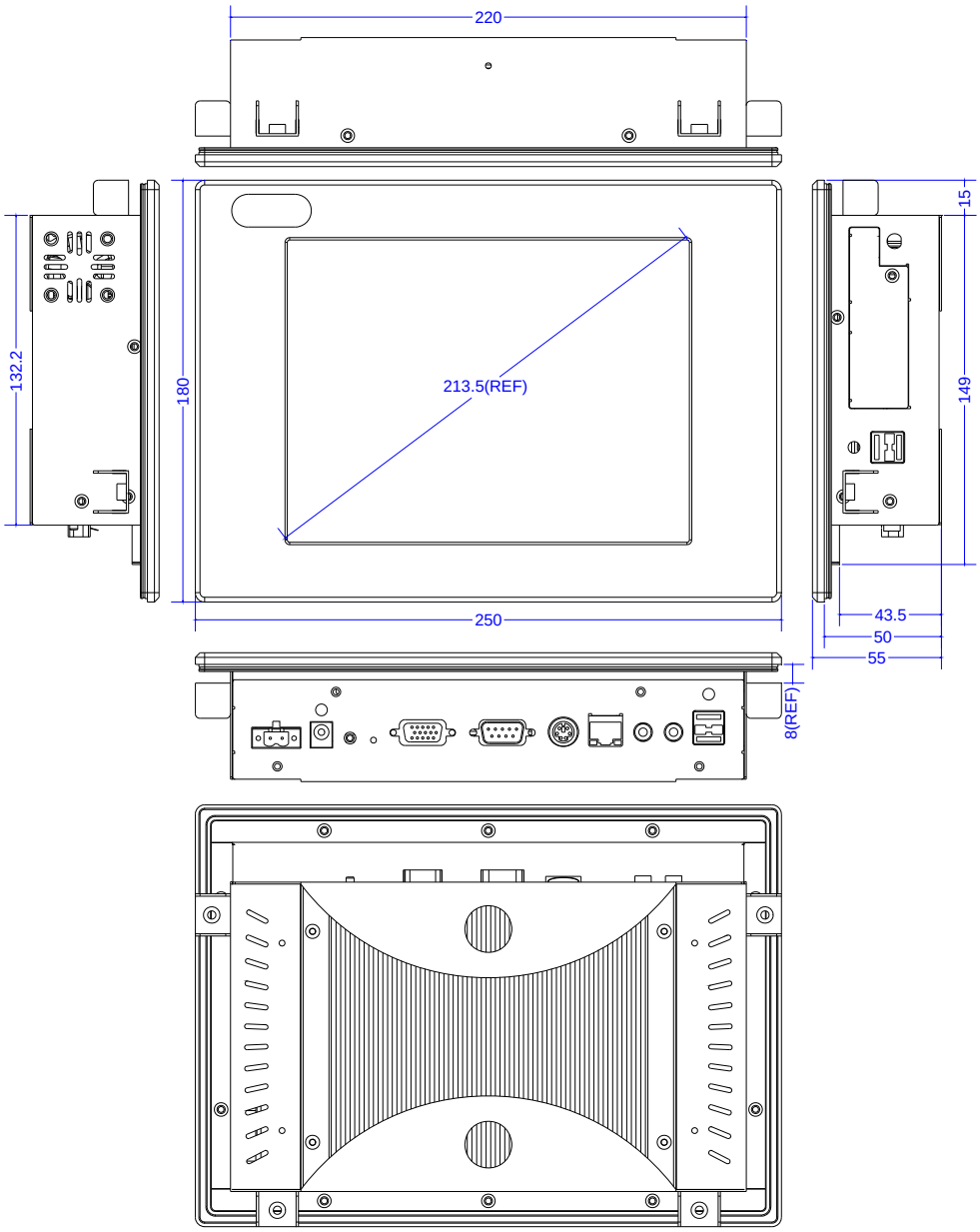

Cut out dimension 222 x 151 mm

b. FP8080K1 Wall Mounting Kit with VESA 75/100 mm

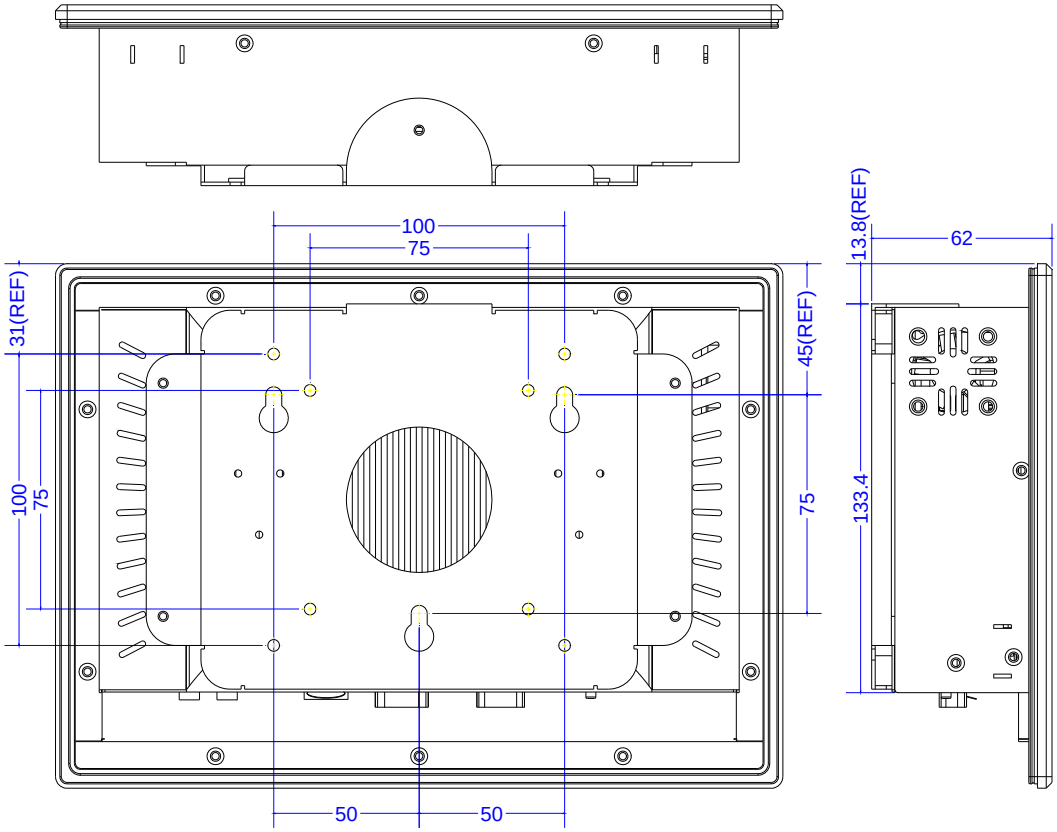

b1. FP8080K2-DIN Rail mounting universal fixers